Online ISSN : 2249-460X
Print ISSN : 0975-587X
DOI : 10.17406/GJHSS

Global Journal

of Human Social Sciences: A

Arts & Humanities

Psychology, Public administration, Library sciences, Sports, Arts, Media, Music



Highlights

- Expressive Textile Arts and Fashion
- Whitman's Eulogy for War and Industry
- Perspective of Literary Cartography
- Suzhou-Hangzhou Paradigm in Tang Poetry

Discovering Thoughts, Inventing Future

VOLUME 23 ISSUE 3 VERSION 1.0

© 2001-2023 by Global Journal of Human Social Sciences, USA

Volume 23 Issue 19 was originally issued as A3

Global Journal of Human-Social Science: A
Arts & Humanities - Psychology

Volume 23 Issue 19
Originally issued as A3

Global Journal of Human-Social Science: A
Arts & Humanities - Psychology

Volume 23 Issue 3 (Ver. 1.0)

Open Association of Research Society

© Global Journal of Human Social Sciences. 2023.

All rights reserved.

This is a special issue published in version 1.0 of "Global Journal of Human Social Sciences." By Global Journals Inc.

All articles are open access articles distributed under "Global Journal of Human Social Sciences"

Reading License, which permits restricted use. Entire contents are copyright by of "Global Journal of Human Social Sciences" unless otherwise noted on specific articles.

No part of this publication may be reproduced or transmitted in any form or by any means, electronic or mechanical, including photocopy, recording, or any information storage and retrieval system, without written permission.

The opinions and statements made in this book are those of the authors concerned. Ultraculture has not verified and neither confirms nor denies any of the foregoing and no warranty or fitness is implied.

Engage with the contents herein at your own risk.

The use of this journal, and the terms and conditions for our providing information, is governed by our Disclaimer, Terms and Conditions and Privacy Policy given on our website http://globaljournals.us/terms-and-condition/menu-id-1463/

By referring / using / reading / any type of association / referencing this journal, this signifies and you acknowledge that you have read them and that you accept and will be bound by the terms thereof.

All information, journals, this journal, activities undertaken, materials, services and our website, terms and conditions, privacy policy, and this journal is subject to change anytime without any prior notice.

Incorporation No.: 0423089
License No.: 42125/022010/1186
Registration No.: 430374
Import-Export Code: 1109007027
Employer Identification Number (EIN):
USA Tax ID: 98-0673427

Global Journals Inc.

*(A Delaware USA Incorporation with "Good Standing"; **Reg. Number: 0423089**)*

Sponsors: Open Association of Research Society
Open Scientific Standards

Publisher's Headquarters office

Global Journals® Headquarters
945th Concord Streets,
Framingham Massachusetts Pin: 01701,
United States of America
USA Toll Free: +001-888-839-7392
USA Toll Free Fax: +001-888-839-7392

Offset Typesetting

Global Journals Incorporated
2nd, Lansdowne, Lansdowne Rd., Croydon-Surrey,
Pin: CR9 2ER, United Kingdom

Packaging & Continental Dispatching

Global Journals Pvt Ltd
E-3130 Sudama Nagar, Near Gopur Square,
Indore, M.P., Pin:452009, India

Find a correspondence nodal officer near you

To find nodal officer of your country, please email us at *local@globaljournals.org*

eContacts

Press Inquiries: *press@globaljournals.org*
Investor Inquiries: *investors@globaljournals.org*
Technical Support: *technology@globaljournals.org*
Media & Releases: *media@globaljournals.org*

Pricing (Excluding Air Parcel Charges):

Yearly Subscription (Personal & Institutional)
250 USD (B/W) & 350 USD (Color)

Editorial Board

Global Journal of Human-Social Science

Dr. Arturo Diaz Suarez

Ed.D., Ph.D. in Physical Education Professor at University of Murcia, Spain

Dr. Prasad V Bidarkota

Ph.D., Department of Economics Florida International University United States

Dr. Alis Puteh

Ph.D. (Edu.Policy) UUM Sintok, Kedah, Malaysia M.Ed (Curr. & Inst.) University of Houston, United States

Dr. André Luiz Pinto

Doctorate in Geology, PhD in Geosciences and Environment, Universidade Estadual Paulista Julio de Mesuita Filho, UNESP, Sao Paulo, Brazil

Dr. Hamada Hassanein

Ph.D, MA in Linguistics, BA & Education in English, Department of English, Faculty of Education, Mansoura University, Mansoura, Egypt

Dr. Asuncin Lpez-Varela

BA, MA (Hons), Ph.D. (Hons) Facultad de Filolog?a. Universidad Complutense Madrid 29040 Madrid Spain

Dr. Faisal G. Khamis

Ph.D in Statistics, Faculty of Economics & Administrative Sciences / AL-Zaytoonah University of Jordan, Jordan

Dr. Adrian Armstrong

BSc Geography, LSE, 1970 Ph.D. Geography (Geomorphology) Kings College London 1980 Ordained Priest, Church of England 1988 Taunton, Somerset, United Kingdom

Dr. Gisela Steins

Ph.D. Psychology, University of Bielefeld, Germany Professor, General and Social Psychology, University of Duisburg-Essen, Germany

Dr. Stephen E. Haggerty

Ph.D. Geology & Geophysics, University of London Associate Professor University of Massachusetts, United States

Dr. Helmut Digel

Ph.D. University of Tbingen, Germany Honorary President of German Athletic Federation (DLV), Germany

Dr. Tanyawat Khampa

Ph.d in Candidate (Social Development), MA. in Social Development, BS. in Sociology and Anthropology, Naresuan University, Thailand

Dr. Gomez-Piqueras, Pedro

Ph.D in Sport Sciences, University Castilla La Mancha, Spain

Dr. Mohammed Nasser Al-Suqri

Ph.D., M.S., B.A in Library and Information Management, Sultan Qaboos University, Oman

Dr. Giaime Berti

Ph.D. School of Economics and Management University of Florence, Italy

Dr. Valerie Zawilski

Associate Professor, Ph.D., University of Toronto MA - Ontario Institute for Studies in Education, Canada

Dr. Edward C. Hoang

Ph.D., Department of Economics, University of Colorado United States

Dr. Intakhab Alam Khan

Ph.D. in Doctorate of Philosophy in Education, King Abdul Aziz University, Saudi Arabia

Dr. Kaneko Mamoru

Ph.D., Tokyo Institute of Technology Structural Engineering Faculty of Political Science and Economics, Waseda University, Tokyo, Japan

Dr. Joaquin Linne

Ph. D in Social Sciences, University of Buenos Aires, Argentina

Dr. Hugo Nami

Ph.D.in Anthropological Sciences, Universidad of Buenos Aires, Argentina, University of Buenos Aires, Argentina

Dr. Luisa dall'Acqua

Ph.D. in Sociology (Decisional Risk sector), Master MU2, College Teacher, in Philosophy (Italy), Edu-Research Group, Zrich/Lugano

Dr. Vesna Stankovic Pejnovic

Ph. D. Philosophy Zagreb, Croatia Rusveltova, Skopje Macedonia

Dr. Raymond K. H. Chan

Ph.D., Sociology, University of Essex, UK Associate Professor City University of Hong Kong, China

Dr. Tao Yang

Ohio State University M.S. Kansas State University B.E. Zhejiang University, China

Mr. Rahul Bhanubhai Chauhan

B.com., M.com., MBA, PhD (Pursuing), Assistant Professor, Parul Institute of Business Administration,
Parul University, Baroda, India

Dr. Rita Mano

Ph.D. Rand Corporation and University of California, Los Angeles, USA Dep. of Human Services, University of Haifa Israel

Dr. Cosimo Magazzino

Aggregate Professor, Roma Tre University Rome, 00145, Italy

Dr. S.R. Adlin Asha Johnson

Ph.D, M. Phil., M. A., B. A in English Literature, Bharathiar University, Coimbatore, India

Dr. Thierry Feuillet

Ph.D in Geomorphology, Master's Degree in Geomorphology, University of Nantes, France

Contents of the Issue

i. Copyright Notice
ii. Editorial Board Members
iii. Chief Author and Dean
iv. Contents of the Issue

1. Searching Information through Technology and Human Interaction. *1-5*
2. Expressive Textile Arts and Fashion-based Intervention for Youth with Emotional Distress: A Pilot Study. *7-22*
3. The Right of Ownership Accruing to the Religious According to the Code of Canon Law. An Outline. *23-27*
4. Research on Suzhou-Hangzhou Paradigm in Tang Poetry from the Perspective of Literary Cartography. *29-33*

v. Fellows
vi. Auxiliary Memberships
vii. Preferred Author Guidelines
viii. Index

Global Journal of human-social science: a
Arts & Humanities - Psychology
Volume 23 Issue 3 Version 1.0 Year 2023
Type: Double Blind Peer Reviewed International Research Journal
Publisher: Global Journals
Online ISSN: 2249-460X & Print ISSN: 0975-587X

Searching Information through Technology and Human Interaction

By Joel Laffita Rivera

European College for Liberal Studies (ECLS)

Abstract- The Computer Age, also known as Digital Age, and Information Age, and New Media Age, has been the most impactable historical period of human civilization. If well the truth that its precursor, the Industrial Revolution, drastically changed the way societies lived and worked and plaid, the magnitude of its impact in terms of communication cannot be compared with the one the Computer Age has brought into today's society. Consequently, technology and human interaction have become a modern society norm. Indeed, a well-considered focus for academic and scientific research. The study takes on the Communication philosophy and Communication Theory to present an outlook on searching for information through technology and human interaction. It focuses on the Shamon Weaver Model to transcribe this model communication concept into a Search Engine Communication Model (SECM). The study has used a qualitative method approach for the collection and analysis of correlated materials such as books and publications and Internet-accredited websites.

Keywords: technology aid; search engine communication model (SECM); search engine searching behaviour.

GJHSS-A Classification: LCC: P87-96



Strictly as per the compliance and regulations of:

© 2023. Joel Laffita Rivera. This research/review article is distributed under the terms of the Attribution-NonCommercial-NoDerivatives 4.0 International (CC BY-NC-ND 4.0). You must give appropriate credit to authors and reference this article if parts of the article are reproduced in any manner. Applicable licensing terms are at https://creativecommons.org/licenses/by-nc-nd/4.0/.

Searching Information through Technology and Human Interaction

Joel Laffita Rivera

Abstract- The Computer Age, also known as Digital Age, and Information Age, and New Media Age, has been the most impactable historical period of human civilization. If well the truth that its precursor, the Industrial Revolution, drastically changed the way societies lived and worked and plaid, the magnitude of its impact in terms of communication cannot be compared with the one the Computer Age has brought into today's society. Consequently, technology and human interaction have become a modern society norm. Indeed, a well-considered focus for academic and scientific research. The study takes on the Communication philosophy and Communication Theory to present an outlook on searching for information through technology and human interaction. It focuses on the Shamon Weaver Model to transcribe this model communication concept into a Search Engine Communication Model (SECM). The study has used a qualitative method approach for the collection and analysis of correlated materials such as books and publications and Internet-accredited websites. The results of this study are beneficial to the academic and scientific communities, respectively.

Keywords: technology aid; search engine communication model (SECM); search engine searching behaviour

I. Introduction

The Computer Age, also known as Digital Age, and Information Age, and New Media Age, has been the most impactable historical period of human civilization. If well the truth that its precursor, the Industrial Revolution, drastically changed the way societies lived and worked and plaid, the magnitude of its impact in terms of communication cannot be compared with the one the Computer Age has brought into today's society. Consequently, technology and human interaction have become a modern society norm. Indeed, a well-considered focus for academic and scientific research.

Today, anyone with access to the internet can get the information pursued by key-in computer search engines such as Google, Bin, Yahoo!, Yandex, Duck DuckGo, Baidu etc. These search engines make up the top ten list in the world, and are among the most popular ones when public searching refers. According to research statistic outputs, it is estimated that the number of people that use these and other search engines easily overpasses the million on a daily basis worldwide (Kinstat Website, 2023). Regardless of the technical internet navigating glitches this technology could present, users' searching demand is always a high level. And the main reason for such reliance relies on the vast and diverse source of knowledge they put at the public disposal. A review of this subject matter produced the hypothesis that all internet' users have one thing in common; a search engine searching communication approach that characterizes the way they do interact with this particular technology aid. Thus, the following outcomes seek to answer the research questions and provide an understanding of this communication approach. See Diagram 1: Shannon–Weaver model Graphical Representation. Diagram 2: Search Engine Communication Model. Table 1: Based Search Engine Communication Categories. And table 2: Search Engine Searching Behavior Criteria:

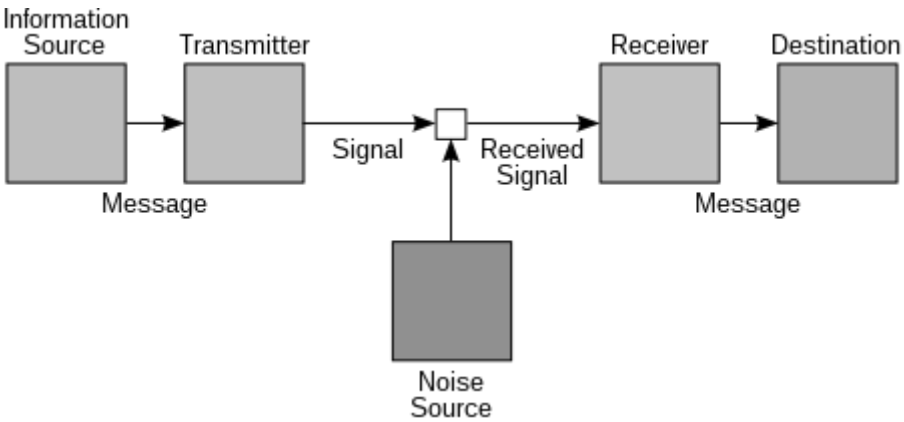

Diagram 1: Shannon–Weaver model Graphical Representation

Author: European College for Liberal Studies (ECLS), Searching Information through Technology and Human Interaction, Applied Communication Theories, Branch Campus Madrid, Spain. e-mail: joel.globaljournals@gmail.com

© 2023 Global Journals

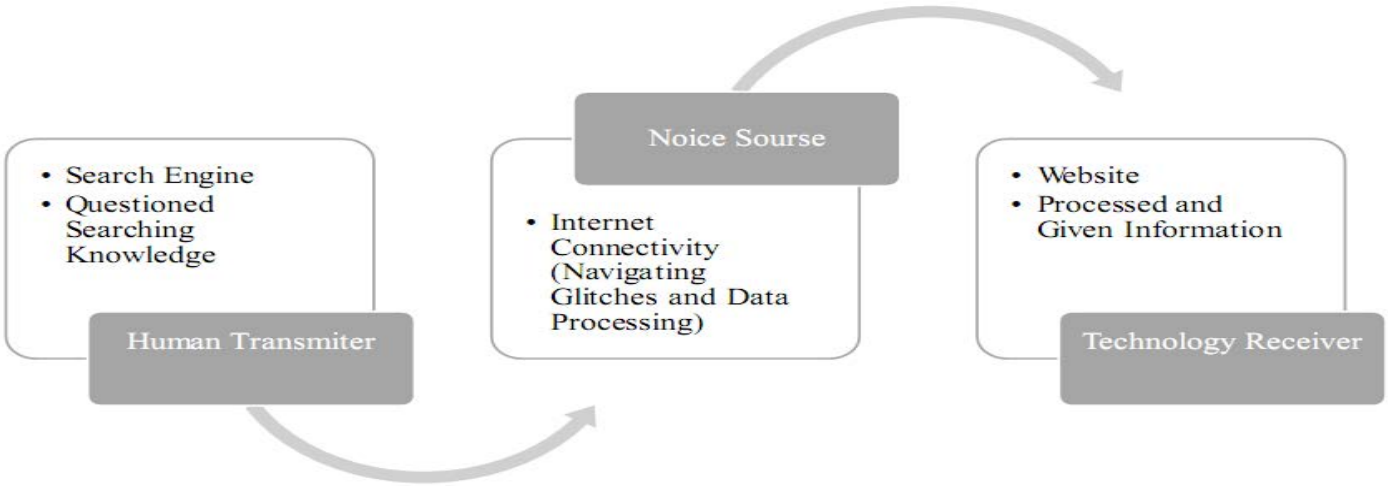

Diagram 2: Search Engine Communication Model

Table 1: Based Search Engine Communication Categories and Equivalence

Human Transmitter	Technology Receiver
Information Source=Search Engine	Destination=Website
Message=Questioned Searching Knowledge	Message=Processed and Given Information

Table 2: Search Engine Searching Behavior Criteria

What?	Searching Subject
Why?	Knowing or Verifying
How?	First-hand Data Collection and Self- Interpretation

II. Literature Review

Communication is usually defined as the transmission of information. The term can also refer to the message, or the field of inquiry studying these massages, known as communication studies. Still, there are some disagreements about the precise definition of communication - for example, whether unintentional or failed transmissions are also included and whether communication does not just transmit meaning but also create it (Rosengren, 2000). An excellent example to be cited is the meaningful linguistic setting that the use of technology creates to communicate specific insights: Google it.!.

Communication Theory, (Katherine, 2005) quotes that it is a proposed description of communication phenomena, the relationships among them, a storyline describing these relationships, and an argument for these three elements. She also argues that Communication theory provides a way of talking about and analyzing key events, processes, and commitments that together form communication. For her, Theory can be seen as a way to map the world and make it navigable; communication theory gives us tools to answer empirical, conceptual, or practical communication questions. According to (Carey, 2009), Communication theory emphasizes its symbolic and social process aspects as seen from two perspectives—as exchange of information (the transmission perspective), and as work done to connect and thus enable the exchange (the ritual perspective). Similarly, the communication concept the (Shannon–Weaver model, 1948). A Mathematical Theory of Communication explains communication in terms of five essential components: a source, a transmitter, a channel, a receiver, and a destination, which has been the pathway to create the Search Engine Communication Model (SECM) and air disclose.

The Model of Communications aims to provide a simplified overview of its main components and their interaction. This makes it easier for researchers to formulate hypotheses, apply communication-related

© 2023 Global Journals

concepts to real-world cases, and test predictions. Models of communication are often categorized based on their intended applications and how they conceptualize communication (Ruben, 2001); (McQuail, 2008); (Narula, 2006). According to (Uma, 2006), New Models May Occur Due to Changes in Modalities. Other communication models have been used to understand communication patterns: Linear transmission model; Interaction model; Transaction model (University of Minnesota, 2016); (Kastberg, 2019).

III. Methodology

According to (Elizabeth, 2022), Qualitative research is a type of research that aims to gather and analyze non-numerical (descriptive) data to gain an understanding of individuals' social reality, including understanding their attitudes, beliefs, and motivation. Indeed, this is a well-simplified view of the Qualitative Research method. Based on this research approach, the set criteria of the present research study involved the collection and analysis of correlated materials such as books and publications and Internet accredited websites. These relevant materials were gathered firsthand and the references extracted from them were treated and cited according to the academic and scientific ethical research criteria to follow. Considering the advantages of the technologies, specifically search engines, it was possible to access all the materials used. The research study development was guided by two fundamental questions. And the revising of the subject matter presented produced the hypothesis and the intended objective.

IV. Fundamental Questions

1) Can a transcription of the Shamon Weaver Model communication concept help us to understand Searching for information through technology and human Interaction?
2) How relevant is this model communication concept in the Era of Technology?

V. Hypothesis

All internet' users have one thing in common; a search engine searching communication approach that characterizes how they interact with this particular technology aid.

VI. Objective

The study takes on the Communication philosophy and Communication Theory to present an outlook on searching for information through technology and human interaction. It focuses on the Shamon Weaver Model to transcribe this model communication concept into a Search Engine Communication Model (SECM).

VII. Analysis

Undoubtedly, the Shamon Weaver Model remains relevant in the Era of Technology. Its communication idea matches the concept and purpose of Communication philosophy and Communication Theory, more importantly, help to create new models according to communication tendencies nowadays. For instance, the one between search engines and humans. As was previously cited, the number of people that use search engines such as Google, Bin; Yahoo!, Yandex, DuckDuckGo, Baidu, and others, easily overpass the million on a daily basis worldwide. Indeed, this is a considerable statistical outcome for us to ponder the necessity to look at and evaluate this subject matter from communication perspectives like the one described in this study. It is well-known that all search engines cited in this paperwork alike when searching for information refer. So, The Search Engine Communication Model, and the Based Search Engine Communication Categories, and Search Engine Searching Behavior Criteria the present study has put forward can be used to analyze communication patterns accordingly.

VIII. Results

The Search Engine Communication Model (SECM) and the Based Search Engine Communication Categories and Search Engine Searching Behavior Criteria provide the necessary insights for us to assign the interaction between search engines and humans. Alike the (Shannon–Weaver model) that explains communication in terms of five essential components; Diagram 2, and Table 1, and Table 2 show these five essential components' functionality according to their intended communication purpose. Diagram 2 shows the Human Transmitter, and the Noise Source, and the Tech Receiver, each one of them with their respective associated insights. Table 1 shows the transmitter and the receiver exchange communication meaning. Table 2 shows the behavior criteria we can use to access this particular communication approach. The result of What and Why and How can be chronologically interpreted as Individual Interest, and Individual Awareness, and Individual Readiness. Although behaviourists generally accept the important role of heredity in determining behaviour, they focus primarily on environmental events (Araiba, 2019). Similarly, one can say that the hypothesis "All internet' users have one thing in common; a search engine searching communication approach that characterizes how they interact with this particular technology aid" is valid. So, the results of this study are trusted as the intended objective has been accomplished. The questions have been answered, and an understanding of the subject matter discussed has been provided. Thus, the research hypothesis is

© 2023 Global Journals

reaffirmed as the Search Engine Communication Model (SECM) and the Based Search Engine Communication Categories and Search Engine Searching Behavior Criteria presented valuable insights that help understanding how searching information through technology and human interaction work, mainly when Search Engines Searching for Information refer. The communication transcription this research study has put forward based on the Shamon Weaver Model communication concept is an example of it.

IX. Conclusion

Models of Communication aim to provide a simplified overview of its main components and their interaction. This makes it easier for researchers to formulate hypotheses, apply communication-related concepts to real-world cases, and test predictions. This based conceptual communication model reflects of the present research study outcome. The Search Engine Communication Model (SECM) and the Based Search Engine Communication Categories and Search Engine Searching Behavior Criteria could lead us to consider adopting their valuable contribution, by doing so, create new models that help understand technology and human interaction contexts.

X. Recommendation

Undoubtedly, the 21st Century has changed human society's development on an unprecedent scale. It is the century of technological advances that have catapulted the field of communication beyond boundaries, being human and technology interaction a well-stablished modern society norm, moreover, a future communication prospect? Because technology and human interaction have gained prominence and use with other technologies such as Chat GPT and Artificial Intelligence (AI), it is recommendable to consider the search engine communication perspective this research study highlights to analyze and answer more complex technology and human interaction settings.

Acknowledgement

The author is very thankful to all the associated personnel in any reference that contributed to this this research study. The research study holds no conflict of interest. It is not funded through any local or foreign monetary source other than being sponsored by the professional interest of its author.

Biography

1. Murray, James (2011-12-18). "Cloud network architecture and ICT-Modern Network Architecture". TechTarget= IT Knowledge Exchange. Archived from the original on 2017-09-20. Retrieved 2013-08-18.
2. Mitcham, C. (15 October 1994). Thinking Through Technology: The Path Between Engineering and Philosophy. University of Chicago Press. ISBN 978-0-226-53198-4.
3. Kinstat Web, Search Engine Market Share: According to Country (as of June 2022) https://kinsta.com/search-engine-market-share/
4. Rosengren, Karl Erik (11 February 2000). "1.1 On communication". Communication: An Introduction. SAGE. pp. 1–2. ISBN 9780803978379.
5. Miller, Katherine (2005). Communication theories: perspectives, processes, and contexts (2nd ed.). Boston: McGraw-Hill. ISBN 0072937947.
6. Carey, James W. (2009). Communication as culture: essays on media and society (Rev. ed.). New York: Routledge. ISBN 9780415989763.
7. Ruben, Brent D. (2001). "Models Of Communication". Encyclopedia of Communication and Information. pp. 607–8. ISBN 9780028653860.
8. McQuail, Denis (2008). "Models of communication". In Donsbach, Wolfgang (ed.). The International Encyclopedia of Communication, 12 Volume Set. Wiley-Blackwell. pp. 3143–9. ISBN 9781405131995.
9. Narula, Uma (2006). "1. Basic Communication Models". Handbook of Communication Models, Perspectives, Strategies. Atlantic Publishers & Dist. pp. 11–44. ISBN 9788126905133.
10. Elizabeth St. Clair, MLIS. "City University of Seattle Library: Research Methods and Design: Qualitative Research Methods". library.cityu.edu. Retrieved 2022-12-14.
11. Cao, Longbing (2008). "Behavior Informatics and Analytics: Let Behavior Talk". 2008 IEEE International Conference on Data Mining Workshops: 87–96. doi:10.1109/ICDMW.2008.95. hdl: 10453/10879. S2CID 10850849.
12. Uma, Narula (2006) Book. Atlantic Publishers & Dist, 2006 ISBN 8126906766, 9788126906765
13. Araiba, S. (2019). "Current diversification of behaviorism". Perspectives on Behavior Science. 43 (1):157–175. doi: 10.1007/s40614-019-00207-0. PMC 7198672. PMID 32440649
14. Shannon, C. E. (July 1948). "A Mathematical Theory of Communication". *Bell System Technical Journal*. 27 (3):381. doi: 10.1002/j.1538-7305.1948.tb01338.x.
15. "1.2 The Communication Process". *Communication in the Real World*. University of Minnesota Libraries Publishing. 29 September 2016. ISBN 9781946135070.
16. Kastberg, Peter (13 December 2019). *Knowledge Communication: Contours of a Research Agenda*. Frank & Timme GmbH. p. 56. ISBN 9783732904327.
17. Narula, Uma (2006). "1. Basic Communication Models". *Handbook of Communication Models,*

© 2023 Global Journals

Perspectives, Strategies. Atlantic Publishers & Dist. pp. 11–44. ISBN 9788126905133.

Internet Acredited Websites

1. https://en.wikipedia.org/wiki/Communication_theory#:~:text=CMC%20theories%20fall%20into%20three,adaptation%20to%2Fexploitation%20of%20media.
2. https://blog.hubspot.com/marketing/top-search-engines
3. https://99firms.com/blog/search-engine-statistics/#gref
4. https://en.wikipedia.org/wiki/Internet_of_things
5. https://www.communicationstudies.com/communication-theories
6. https://en.wikipedia.org/wiki/Communication_theory#Information_Theory
7. https://en.wikipedia.org/wiki/Information_and_communications_technology
8. https://en.wikipedia.org/wiki/Behavior_informatics
9. https://books.google.es/books/about/Communication_Models.html?id=NCpYZSSEWwEC&source=kp_book_description&redir_esc=y

© 2023 Global Journals

This page is intentionally left blank

© 2023 Global Journals

Global Journal of human-social science: A
Arts & Humanities - Psychology
Volume 23 Issue 3 Version 1.0 Year 2023
Type: Double Blind Peer Reviewed International Research Journal
Publisher: Global Journals
Online ISSN: 2249-460X & Print ISSN: 0975-587X

Expressive Textile Arts and Fashion-based Intervention for Youth with Emotional Distress: A Pilot Study

By Wai-Kwan LI, Chi-Hin LAM & Sau-Chuen Joe AU

The Hong Kong Polytechnic University

Abstract- Recent years have seen increased interest in early intervention in and prevention of mental health difficulties during adolescence. In this pilot study, a structured expressive textile art and fashion based (ETAFB) intervention was conducted to evaluate the beneficial effects on personal well-being and social interaction of youth with emotional distress. A one-group pretest-posttest pilot study was conducted among 18 youth with emotional distress. All the participants attended four sessions of ETAFB intervention. All the participants were subjected to a preintervention test and a 4-week postintervention test using the Personal Wellbeing Index – School Children (PWI-SC), 12-item General Health Questionnaire (GHQ-12), and Social Interaction Anxiety Scale (SIAS). The study findings revealed that the ETAFB intervention was associated with significant improvements in some of the measurements. This information provides the groundwork for a further study to investigate the effect of the ETAFB intervention on the relationship between youth well-being and facilitators.

Keywords: textile art–based intervention; youth; emotional distress; personal well-being; fashion; general health.

GJHSS-A Classification: FOR Code: 950199



Strictly as per the compliance and regulations of:

© 2023. Wai-Kwan LI, Chi-Hin LAM & Sau-Chuen Joe AU. This research/review article is distributed under the terms of the Attribution-NonCommercial-NoDerivatives 4.0 International (CC BY-NC-ND 4.0). You must give appropriate credit to authors and reference this article if parts of the article are reproduced in any manner. Applicable licensing terms are at https://creativecommons.org/licenses/by-nc-nd/4.0/.

Expressive Textile Arts and Fashion-based Intervention for Youth with Emotional Distress: A Pilot Study

Wai-Kwan LI [α], Chi-Hin LAM [σ] & Sau-Chuen Joe AU [ρ]

Abstract- Recent years have seen increased interest in early intervention in and prevention of mental health difficulties during adolescence. In this pilot study, a structured expressive textile art and fashion based (ETAFB) intervention was conducted to evaluate the beneficial effects on personal well-being and social interaction of youth with emotional distress. A one-group pretest-posttest pilot study was conducted among 18 youth with emotional distress. All the participants attended four sessions of ETAFB intervention. All the participants were subjected to a preintervention test and a 4-week postintervention test using the Personal Wellbeing Index – School Children (PWI-SC), 12-item General Health Questionnaire (GHQ-12), and Social Interaction Anxiety Scale (SIAS). The study findings revealed that the ETAFB intervention was associated with significant improvements in some of the measurements. This information provides the groundwork for a further study to investigate the effect of the ETAFB intervention on the relationship between youth well-being and facilitators.

Keywords: textile art–based intervention; youth; emotional distress; personal well-being; fashion; general health.

I. Introduction

A healthy mental status for youth is particularly important for establishing foundations for health essential to their well-being as adults. Most mental illness diagnosed in adulthood begins in early or midadolescence (Kessler et al., 2005). Particularly, increased stress and subsequent stress appraisal can cause individuals to suffer emotional distress, which may be referred to as emotional issues, emotional symptoms, or emotional challenges if they feel unequipped to address their difficulties (Maslach & Leiter, 2016). The term "emotional distress" refers to various affective, cognitive, and somatic symptoms of depression (Radloff, 1977).

Youth experience various daily stressors during this developmental period, including physical and sexual transformations associated with teenage years, school demands (Owens et al., 2008), problems initiating and maintaining friendships and romantic relationships, career choices, the start of their working lives, and gradual separation from their parents. Various stressful experiences have been associated with emotional distress. That distress may be linked to mental health problems such as depression (Van den et al., 2008).

According to O'Neill et al. (2021), most youth suffering from mental health difficulties are experiencing emotional distress. Youth mental health problems are increasing. According to the World Health Organization, 10%–20% of youth worldwide suffer from mental disorders (2023). In Hong Kong, a recent study found high rates of symptoms of depression (48%), anxiety (51%), and stressful relationships with parents (70%) among secondary school students (Baptist Oi Kwan Social Service, 2022). Save the Children Hong Kong conducted another large research project, indicating that 39% of Hong Kong's school-aged children may suffer from mental health disorders. More than half of secondary school students experience some symptoms of depression; 34% report difficulty staying focused, 30% feel anxious, and 26% report difficulty sleeping (Save the Children Hong Kong, 2020).

Emotional distress is among the critical indicators of youth mental health. Researchers have found that adolescents who report healthier emotional well-being are more probable to perform well academically. (Eccles et al., 1997; Kerr et al., 2004). Poor mental health is associated with several adverse outcomes during adolescence, including higher suicide rates (Bould, 2019) and increased risk of mental health concerns later in life (Johnson, 2018). Due to poor emotional well-being, youth are likely to experience an increased risk of delinquency, lower self-esteem, social withdrawal, academic failure, and a reduced likelihood of attending university (Fergusson & Woodward, 2002; Sawyer et al., 2001). While emotional distress can be difficult for youth generally, it can be particularly challenging for youth with developmental disabilities, including autism spectrum disorders (ASDs), cerebral

Author α: Full Time Research Student in the School of Fashion and Textiles, The Hong Kong Polytechnic University. She has over 10 years of Experience in the Fashion Industry as a Knitwear Designer. Her Research Interests include Knitwear Design and Co-design Development. e-mail: wai-kwan.li@connect.polyu.hk

Author σ: Assistant Professor in the School of Fashion and Textiles, The Hong Kong Polytechnic University. Her Research Focus includes the Co-Design Process of Expressive Textile Arts and Fashion-based Intervention and its Impact on Underprivileged People of the Excluded Communities, such as Ex-mentally ill Persons, People with Dementia, Intellectual Disability and Students with Special Education needs, and the Changes of Participants' Behaviours and Psychological Mechanisms. e-mail: jin.lam@polyu.edu.hk

Author ρ: Associate Professor of the School of Fashion and Textiles in the Hong Kong Polytechnic University. His Research Interests include Fashion and Textile Design Theory, Elderly Fashion, and 3D Printed Fashion. e-mail: joe.au@polyu.edu.hk

© 2023 Global Journals

palsy (CP), intellectual disabilities (IDs), attention deficit hyperactivity disorder (ADHD), and learning disabilities (Developmental disabilities, 2021; Hitomi, 2022; Mazzucchelli & Sanders, 2011; Morie, 2019). Due to the wide variety of child and youth mental disorders, it is essential to address the emotional distress concerns of youth, given the high prevalence of mental illness and the ramifications for their adult lives if left untreated.

a) Efficacy of Art-based Intervention

Expressive arts can foster human growth, development, and healing by integrating imagery, storytelling, dance, music, drama, poetry, writing, movement, dream work, and visual arts (Atkins, 2002). Through using nonverbal approaches to creative expression, art therapy facilitates emotional exploration, mood adjustment, behaviour management, self-awareness, social skills development, anxiety reduction, and self-esteem development (American Art Therapy Association, 2013). Through artistic materials, practitioners strive to facilitate clients' personal growth and change (British Association of Art Therapists, 2022). This involves active artmaking, the creative process, psychological theory, and human experience within a psychotherapeutic relationship enhancing the lives of individuals, families, and communities (American Art Therapy Association, 2017). The practice has gradually gained recognition as a form of spiritual support and complementary therapy (Faller & Schmidt, 2004; Nainis et al., 2006). Youth can experience art-making as a form of empowerment by exercising their choice and creating (Moon, 2012). Among youth with behavioural-emotional issues, art therapy has been found to reduce stress levels (Irvin, 2014), anxiety (Sandmire et al., 2012), and depression symptoms (Bell & Robbins, 2007).

It has been shown that art therapy results in beneficial outcomes for children and youth with emotional distress. Cohen-Yatziv and Regev (2019) presented a study on art therapy for youth and found positive emotional effects in youth with impairments, juvenile offenders, and children in special education and with disabilities. In a secure and controlled environment, the expressive language of art is a means of exploring and communicating youths' emotional worlds. A large urban trauma centre evaluated by Chapman et al. (2001) reported success with art therapy. A total of 85 children aged 7 to 17 who had been admitted to a level I trauma centre with traumatic injuries participated in the Chapman art therapy treatment intervention. Children may be able to discuss and process their traumatic experiences through the intervention, which has effectively reduced acute and emotional distress symptoms. The Art Room, a structured biweekly arts engagement programme offered in school settings for a minimum of 10 weeks, was evaluated by Cortina and Fazel (2015). A significant improvement was found in youth's emotional and behavioural outcomes, with a reduction in clinical-level difficulties by 41% and an improvement in moods and feelings by 87.5% postintervention (Cortina & Fazel, 2015). Kim et al. (2014) investigated the effects of group art therapy and mindfulness-based breathwork on the subjective well-being of depressed and anxious youth. Through art activities, the subconscious can be expressed naturally, and painful emotions and thoughts can be revealed without verbal communication. A statistically significant decrease in symptoms of depression and anxiety was reported in the study (Kim et al., 2014).

Various benefits have been associated with art and expressive arts, with emotional benefits among youth (Chapman et al., 2001; Cortina & Fazel, 2015; Cohen-Yatziv & Regev, 2019; Kim et al., 2014; Moon, 2012). Engaging in creative processes can reduces emotional distress and provide a safe environment where youth can explore new possibilities.

b) Textile and Fashion Activities

Textile crafting and fashion design are distinct art forms. Due to their unique malleability, they can be shaped into various unique styles and three-dimensional prototypes. With a codesigned creation, participants could express their unique values and potential while connecting with the community and using fashion and textiles as a common medium to express themselves. The literature indicates that textile crafting can be used as a tool for power, self-expression, and identity for individuals, partners, families, and groups.

Crafting empowers the crafter by giving them pride in their skills and accomplishments (Corkhill et al., 2014; Maidment & Macfarlane, 2011) as well as providing continuity and support during life changes (Kenning, 2015). Self-esteem may be improved when the maker and object interact (Fisher, 1995; Burt & Atkinson, 2011; Schofield- Tomschlin & Littrell, 2001). Leisure activities contribute to the positive development and well-being of people of all ages (Collier, 2011; Burt & Atkinson, 2011; Bailey & Fernando, 2012). Positive mental health and problem behaviour are also promoted by leisure activities (Casey et al., 2005). Incorporating crafts as a leisure activity into socialmedia has provided a channel for community-building, mutual support, recognition, idea sharing, and inspiration (Orton-Johnson, 2012). Crafting enables individuals to empower themselves through the fabrication and designing process. Gardner (1990) describes crafting as intuitive learning achieved through evaluating materials and skill acquisition during the crafting process. By handling and assembling raw materials, individuals realize they can control their lives by developing self-determination.

Additionally, previous studies found that intensive involvement in leisure activities contributed positive developmental outcomes and acquiring new skills (Reynolds, 2010; Verbakel, 2012). Burns and Van

© 2023 Global Journals

Der Meer (2020) used a similar approach to Corkhill et al. (2014) and Riley et al. (2013) in their studies on crochet. According to their international online survey, crocheting led to themes of creativity, relaxation, and a feeling of accomplishment. Additionally, participants reported using crochet to manage physical and mental health concerns, including depression, anxiety, eating disorders, drinking, smoking, and chronic pain. Knitting has been reported to improve well-being, self-esteem, and emotional regulation among patients suffering from various mental health challenges, including anorexia nervosa (Clave-Brule et al., 2009) and substance abuse (Duffy, 2007). A study by Iso-Ahola and Mannell (2004) concluded that participating in self-selected leisure activities increases well-being and life satisfaction and reduces psychological distress, depression, and anxiety. Through the process of crafting, individuals can empower themselves. Gardner (1990) describes craft as a method of intuitive learning achieved through evaluating and acquiring skills during crafting. An individual's emotional well-being may be improved by achieving success in a specific activity, according to Tubbs et al. (2017).

People can positively influence and own their lives by handling and assembling raw materials. A textile art and craft goal can assist individuals in achieving personal life and health goals and empower them (Diener, 2000). Furthermore, studies have shown that leisure activities provide opportunities for creative expression and social interaction (Gibson, 1997; Gabriel & Bowling, 2004; Iwasaki, 2006). Schofield- Tomschlin and Littrell (2001) argue that women who make textiles experience enjoyment, self-actualization, and empowerment due to the crafting process's therapeutic effects. Textile arts have been associated with various benefits, such as cognitive, physical, social, and emotional. Craft-based interventions were explicitly established to reduce the mental distress and improve the well-being of participants from all sectors of society (Browne & Rhodes 2011; Desmarais 2016; Setterington & Millar 2018; Shercliff 2014). Clothing can change one's mood, enhance confidence, and express one's perception of one's appearance through appropriate clothing behaviour, providing a therapeutic meaning to overcome depressive mood (Dubler & Gurel, 1984; Kim & Lee, 1999).

This study aims to investigate the benefits of the ETAFB intervention as a treatment for youth with emotional distress in community settings. The outcomes included measures of personal well-being using the PWI-SC; an improvement in general health, which will be measured with the GHQ-12; and reduced social interaction anxiety, measured with the SIAS. A structured ETAFB intervention framework integrated with the theory of person-centred expressive arts therapy, expressive therapies continuum, and a codesign model was developed to facilitate scientific evidence-based evaluation. It is hypothesized that after the 4-week ETAFB intervention, participants will show improved personal well-being and general health outcomes and reduced social interaction anxiety as evidenced by the pre- and posttest scores of the measurements employed.

c) Significance

The structured ETAFB intervention framework integrated with the theory of person-centred expressive arts therapy, expressive therapies continuum, and a codesign process model on a multimodal media approach is unique and novel in this research context. Young people fail to seek mental help mostly are because of embarrassment and difficulties in recognizing problems, and a desire to address difficulties themselves (Gulliver, 2010; Radez, 2020). The World Health Organization (WHO) has emphasized the significance of youth friendliness in health services globally and undertaken efforts to increase the emphasis on youth of such services (World Health Organization, 2012). It is believed that by making services more youth-friendly, these services will be more frequently used by youth, and be satisfied with the assistance they receive (McIntyre, 2002). The ETAFB intervention ensuring the services are effective, safe, community-based, confidential, and accessible provided mental health care for young people "youth-friendly" and promoting a positive attitude among young people seeking help. Furthermore, high demands on specialist services, limited available provision, and long waiting lists present key barriers to accessing youth mental services (Moore, 2018). Therefore, expressive arts as an easily accessible, low-cost therapeutic activity that promotes self-care and healthy outlets for heightened emotions is essential (Braus & Moton, 2020). The ETAFB intervention is expected to act as an early intervention regarding assertive community treatment to minimize the risk of relapse and hospitalization of youth with mental impairment. Finally, this study is expected to reduce emotional distress among youth in Hong Kong and influence future government policy and resource allocation regarding mental health. Therefore, the study's benefits are fully integrated with the needs of Hong Kong. Limited evidence-based studies on arts engagement have been conducted in Hong Kong. As expected, current approaches to evaluating art-based intervention are limited. Arts inclusion projects must be encouraged, first by the government and then by NGOs (Chan et al., 2018).

II. Data and Methodology

A one-group pretest–posttest design was adopted for the evaluation of ETAFB interventions in this study. Convenience sampling was adopted to recruit participants in a community centre run by a local NGO –

© 2023 Global Journals

Heep Hong Society in Hong Kong. Social workers identified 18 youth with emotional distress and recruited them to participate in the intervention. All participants were informed that their responses would remain confidential. It was emphasized that participation was voluntary and that participants could stop attending workshops at any time without repercussions. Participants aged 18 or above signed an informed consent agreement describing the format and potential risks and benefits of participation. Participants aged under 18 submitted a signed parent/guardian consent form at the beginning of the study. The participants were youth with emotional distress. Each participant was grouped with three students to form a codesign team. The principal investigator, one qualified art therapist, one social worker, one research assistant (RA), and 54 student helpers assisted with the pilot study. The participation criteria were: (a) youth from aged 14–19 in Hong Kong;(b) identified by social workers and schoolteachers as having mental distress; (c) able to read and write (to understand all teaching materials and instructions); and, (d) be independently assessable and willing to provide data for research purposes. Excluded were those who had (a) practised or recently learned art therapy in the last 6 months; (b) been diagnosed with a severe mental disorder such as bipolar disorder, schizophrenia, dementia, or depression in an acute phase; (c) identified with self- reported suicidal thoughts or drug abuse in the last 6 months; or (d) a lack of willingness to provide data for research purposes. This study was conducted in June 2021 as a prospective pilot study. All the eligible participants were assigned to the experiment group (EG), which received textile arts and fashion-based activities in a codesign setting. The test completion rate was 100%. All the participants completed the PWI-SC, GHQ-12, and SIAS assessments at a preintervention test (T0) and a 4-weeks postintervention test (T1) administered by the RA. The study protocol was approved by the Human Subject Ethics Sub-Committee of the Hong Kong Polytechnic University (Reference number: HSEARS20 210527002). The aim was to explore the feasibility and preliminary effects of the ETAFB intervention on youth facing emotional difficulties. Figure 1 indicated the consolidated standards of reporting trials flow diagram for the ETAFB pilot study.

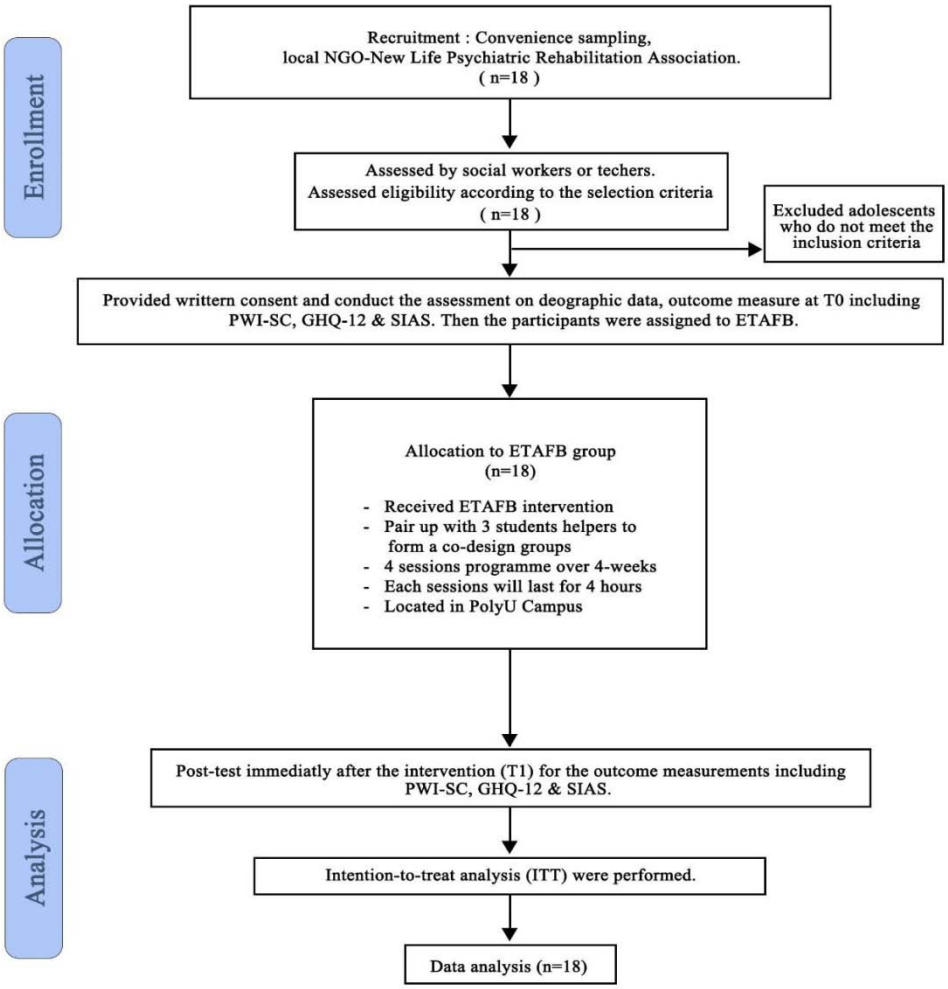

Fig. 1: Consolidated Standards of Reporting Trials (CONSORT) flow diagram – pilot study (PWI-SC = Personal Wellbeing Index – School Children; GHQ-12 = the 12-item General Health Questionnaire; SIAS = Social Interaction Anxiety Scale).

© 2023 Global Journals

a) Measurements

Personal Wellbeing Index – School Children (PWI-SC): It is a unidimensional and multi-item instrument developed by Cummins and Lau (2005) for measuring personal well-being in school-aged children and youth. This instrument comprises seven items corresponding to satisfaction with the following life domains: standard of living, health, life achievements, personal relationships, personal safety, community connectedness, and future security, using an 11-point end-defined rating scale ranging from 0 (very sad) to 10 (very happy), with the midpoint at 5 (not happy or sad).

The 12-item General Health Questionnaire (GHQ-12): Using a 4-point Likert-type scale, the 12-item General Health Questionnaire (GHQ-12; Goldberg & Williams, 1988) assesses the severity of a mental problem over the past few weeks. The total score ranges from 0 to 36 based on the score. Positive items are corrected from 0 (always) to 3 (never), and negative items from 3 (always) to 0 (never). The higher the score, the worse the health. The GHQ-12 was designed as a one- dimensional measure of psychological distress. Due to its brevity, it has become a popular tool for detecting psychological distress in nonclinical samples (Hankins, 2008; Tomás et al., 2017). The Chinese version translated by Ye (2009) was used.

Social Interaction Anxiety Scale (SIAS): To measure the experience of social anxiety, participants were asked to complete the Social Interaction Anxiety Scale (SIAS; Mattick & Clarke, 1998) pre- and posttreatment. The SIAS is a self-report survey comprising 20 questions rated on a Likert-type scale from 0 (not at all) to 4 (extremely) regarding how much one experiences fear in social interactions. Total scores range from 0 to 80, with higher scores representing higher levels of social interaction anxiety. Items are self-statements describing one's representative reaction to situations involving social interaction in dyads or groups.

b) Data Analysis

SPSS version 22.0 will be used to analyze the data. The participants' demographic information will be analyzed using descriptive statistics (i.e., percentages, means, and SDs). A paired sample t-test will be used to examine the association between the pretest and posttest variables. The Cohen's d statistic was used to determine the effect size (Cohen, 1988). According to Cohen's d, small, medium, and large effect sizes are categorized as 0.20, 0.50, and 0.80, respectively. A descriptive summary measure will be used to summarize the sociodemographic data, and percentages will be presented for categorical variables. All data analyses will be conducted as two-tailed with a significance level of $p < .05$. To prevent missing data, the outcomes assessors will carefully examine all questionnaires returned by participants. The ETAFB intervention will be analyzed using intention-to-treat (ITT) analysis, so any dropout would result in missing values, causing the total score to be miscalculated. Using mean imputation, missing items are replaced with the mean of that variable for all other cases, which does not change the sample mean.

c) Etafb Intervention

The study will adopt a preintervention and postintervention survey design. This evaluates the effectiveness of the intervention on the participants by adopting measures of personal well-being (PWI-SC), general health (GHQ-12), and social anxiety (SIAS). Four structured sessions will be conducted as part of the ETAFB intervention. After participants are allocated to the EG, they will be grouped with three to four students to form a codesign team. The details of the ETAFB intervention are provided in Table 1.

Session I: The 4-hour workshop began with a 30-minute self-administered pretest, including the PWI-SC, GHQ-12, SIAS assessments and sociodemographic questions. After collected the completed surveys, a calming exercise (i.e., box breathing exercise applying a simple relaxation technique for recentring and improving concentration through meditation) was performed, led by social workers, engaged all students and participants as a warm-up. Afterwards, the concepts, theories, and practices of expressive textile arts and fashion design were introduced. The purpose of this session was to provide a comprehensive description of fashion design theory. Participants could then apply this knowledge in designing their creative outfits. Students and the art therapists guided participants in developing their ideas and formulating their goals. Goal setting and striving for achievement were crucial for achieving personal fulfilment (Canfield, 1989). This session was designed to stimulate youth interest in textiles and fashion and facilitate relaxation and enjoyment.

Session II: Students and art therapists facilitated a codesign discussion (30 minutes) with the participants to develop a codesign plan within a mutually supportive and secure environment. Patternmaking and sewing techniques were demonstrated afterwards. Instructed by the students and art therapists, the participants would develop practical, organizational, and problem-solving skills. The codesign discussion was conducted to identify and define design problems and requirements based on participants' opinions and expectations (LaBat & Sokolowski, 1999). This resulted in optimal clothing styles and functional design requirements being identified.

Session III: Students and art therapists facilitated a codesign discussion (30 minutes). Participants adjusted the codesign prototypes after a fitting session. Textile arts and fashion design techniques were demonstrated, included printmaking, fabric collage, hand painting, and

© 2023 Global Journals

beading. Materials for textile arts (e.g., fabric swatches and paint, yarns, beads, sewing materials, knitting needles, and crochet hooks) were provided. Participants were instructed on applying crafting techniques to their prototypes. The textile arts and craft activities helped stimulate tactile and sensory functions and enhance the participants' sense of relaxation and calmness. At the end of the session, each group prepared styling references and discusses their final photoshoot plan.

Session IV: Final designs were completed after fitting. A styling photoshoot was conducted with each group on campus. Participants styled their hair and applied make-up for the photoshoot to demonstrate their creativity and confidence. This interactive photoshoot aimed to allow participants to express insecurities and receive affirmation; consequently, their self-esteem will be enhanced, self-identity further developed, and experiences of personal accomplishment achieved (Hong et al., 2012). Each group then presented their creative work in this session. The PI, RAs, student helpers, social workers, schoolteachers, and art therapists formed the audience base. Participating in the sharing session allowed participants to communicate with others and establish mutual understanding. This experience enabled them to exchange skills and experiences, receive mutual support and validation (Leone, 2020), experience social contact (Riley et al., 2013), establish relationships, and foster a sense of belonging (Burt & Atkinson, 2011). Afterwards, participants kept their codesign prototypes. The participants completed a self-administered posttest, which includes PWI-SC, GHQ-12 and SIAS assessments, at the end of this session.

Table 1: ETAFB intervention. (PWI-SC = Personal Wellbeing Index – School Children; GHQ-12 = the 12-item General Health Questionnaire; SIAS = Social Interaction Anxiety Scale.)

Session	Main theme	Contents	Led by
I	Orientation session	• Welcome & introduction speech • Introduction to ETAFB intervention • Pretest: PWI-SC, GHQ-12, SIAS, and sociodemographic questions • Exercise: Ice-breaking and trust-building activities • Codesign discussion • Size measurement • Sketch illustration	PI; student helpers; art therapist
II	Design your style	• Codesign discussion • Sourcing • Practical knowledge lecture • Patternmaking and sewing	PI; student helpers
III	Hands-on textile workshop	• Codesign discussion • Fitting session • Textile art and craft task • Prepare styling references	PI; student helpers
IV	Photoshooting and sharing session	• Codesign discussion • Hair & make-up styling • Photoshooting • Sharing sessions • Posttest: PWI-SC, GHQ-12, SIAS	PI; student helpers; art therapist

Table 2: Objectives of each ETAFB session.

Session	Main themes	Expressive therapies continuum model (Kagin & Lusebrink, 1978)	Objectives
I	Orientation session	Cognitive/symbolic	• Establish a mutually supportive and safe group atmosphere (Leone, 2020) • Explore multidimensional experience • Imagine positive self-identity (Reynolds, 2000) • Foster communication between participants (Garlock, 2016)

© 2023 Global Journals

II	Design your style	Kinesthetic/sensory perceptual/affective	• Support the problem-solving process (Kouprie & Visser, 2009) • Pursue excitement and pleasurable involvement • Improve problem-solving skills (Kouprie & Visser, 2009) • Catalyze relaxation and stress reduction (Utsch, 2007) • Stimulate tactile and sensory functions (Homer, 2015) • Reduce ruminative thinking (Futterman et al., 2016) • Develop positive self-image and self-perception (Kang et al., 2013) • Adopt rational and analytical steps (Rubin, 2005) • Manipulate organization skills
III	Hands-on textile workshop	Kinesthetic/sensory perceptual/affective	
IV	Photoshooting and sharing session	Perceptual/affective cognitive/symbolic	• Promote peer support (Kouprie & Visser, 2009) • Enable the externalization and visual communication of inner subjective experiences (Dunphy et al., 2019) • Facilitate personal achievement and fulfilment through creative output • Boost self-confidence • Encourage youth to explore and introduce themselves through the art (Kahn, 1999) • Increase self-awareness by exploring their issues (Kahn, 1999) • Set goals for change (Kahn, 1999)

Table 3: Pictures for the ETAFB intervention. (PWI-SC = Personal Wellbeing Index – School Children; GHQ-12 = the 12-item General Health Questionnaire and SIAS = Social Interaction Anxiety Scale.)

Session	I	II	III	IV
Contents	• Welcome & introduction speech • Pretest: PWI-SC, GHQ-12, SIAS & Sociodemographic questions • Exercise: Ice-breaking activities • Codesign discussion • Size measurement • Sketch illustration	• Codesign discussion • Sourcing • Practical knowledge lecture • Pattern making and sewing	• Codesign discussion • Fitting session • Textile art and craft task • Prepare styling references	• Codesign discussion • Hair & make-upstyling • Photoshooting • Sharing sessions • Posttest:PWI-SC,GHQ-12,SIAS
Group A				
Group B				

© 2023 Global Journals

III. Results and Discussion

A total of 18 youth aged 16–19 with negative emotional distress participated in this study. The average age of the participants was 17.6 (SD = 1.24). All the participants completed the intervention, with an overall attendance rate of 100%. Thus, all participants completed the sociodemographic questionnaires at baseline as well as the pretest and posttest questionnaires. As detailed in Table 4, many of the participants (66.7%, n = 12) were male. Regarding the age distribution, those aged 16, 17, 18, and 19 accounted for 27.8% (n = 5), 16.7% (n = 3), 22.2% (n = 4), and 33.3% (n = 6) of the participants, respectively. Among the participants, 44% had an ASD diagnosis and 16.7% an ADHD diagnosis. All the participants had received education at secondary school level (i.e., high school level; n = 100%). All the participants were single (n = 100%).

Table 4: Sociodemographic information of participants. (ASD = autism spectrum disorder and ADHD = attention deficit hyperactivity disorder.)

Parameter	Number, percentage (*N* = 18)
Age, years	
Under 15	0 (0%)
15	0 (0%)
16	5 (27.8%)
17	3 (16.7%)
18	4 (22.2%)
19	6 (33.3%)
Gender	
Female	6 (33.3%)
Male	12 (66.7%)
Education level	
Primary level or below	0 (0%)
Secondary education	18 (100%)
Tertiary education or above	0 (0%)
Marital status	
Single	18 (100%)
Married	0 (0%)
Medical history	
ASD	8 (44%)
ADHD	3 (16.7%)

The data collected from the pretest and posttest were tabulated to investigate the effectiveness of applying the ETAFB intervention as an adjuvant treatment to reduce emotional distress among youth. As indicated in Table 6, paired sample *t*-tests were conducted to determine the differences between the mean scores of the pretest and posttest of the PWI-SC, GHQ-12, and SIAS for the 18 participants.

The results of the PWI-SC indicated a significant enhancement in the personal well- being of the participants during the ETAFB intervention in the achievement in life domain (t (17) = -3.37, $p < .05$), with means of 7.72 (n = 18, SD = 0.75) and 8.39 (n = 18, SD = 0.78) at the pretest (*T0*) and posttest (*T1*) stages, respectively. In the personal relationships domain (t (17) = 0.001, $p < .05$), means of 6.5 (n = 21, SD = 1.1) and 7.45 (n = 21, SD = 0.86) were recorded at the pretest and posttest stages, respectively. In the feeling part of the community domain (t (17) = -3.29, $p < .05$), means of 6.95 (n = 21, SD = 1.21) and 7.72 (n = 21, SD = 0.9)

© 2023 Global Journals

were recorded at the pretest and posttest stages, respectively, and in the future security domains (t (17) = -3.29, $p < .05$), means of 6.44 (n = 21, SD = 1.58) and 7.22 (n = 21, SD = 1.52) were recorded at the pretest and posttest stages, respectively. A p-value of $\leq .05$ was considered statistically significant. As the results indicated, no significant differences were observed in the domain of physical health and environment (Table 5).

Table 5: Results of Paired Samples t-test. (N = 18. SEM = standard error of the mean; df = degrees of freedom.)

Participantsn =18	Mean	Std. Dev	S.E. mean	Paired *t*-test		
				T value	df	Significance (2-tailed)
						Prevs Post
Personal Wellbeing Index–School Children (PWI-SC)						
Standard of Living						
Pretest	6.56	1.5	0.35	-2.91	17	0.1
Posttest	6.89	1.57	0.37			
Personal Health						
Pretest	6.94	0.87	0.21	-2.56	17	0.2
Posttest	7.22	0.94	0.22			
Achieving in Life						
Pretest	7.72	0.75	0.18	-3.37	17	0.004
Posttest	8.39	0.78	0.18			
Personal Relationships						
Pretest	6.5	1.1	0.26	-3.8	17	0.001
Posttest	7.45	0.86	0.2			
Personal Safety						
Pretest	7.06	1.11	0.26	-1.71	17	0.1
Posttest	7.28	1.18	0.28			
Community-Connectedness						
Pretest	6.95	1.21	0.29	-3.29	17	0.004
Posttest	7.72	0.9	0.21			
Future Security						
Pretest	6.44	1.58	0.37	-3.29	17	0.004
Posttest	7.22	1.52	0.36			
The12-item General Health Questionnaire(GHQ-12)						
Pretest	11.89	2.45	0.58	9.24	17	<0.001
Posttest	7.83	2.55	0.6			
Social Interaction Anxiety Scale(SIAS)						
Pretest	35.28	3.32	0.78	4.17	17	<0.001
Posttest	33.11	2.44	0.58			

© 2023 Global Journals

Moreover, significant improvements in the participants' general health were observed. The results revealed that the pretest and posttest GHQ-12 scores differed significantly, with means of 11.89 (n = 18, SD = 2.45) at the pretest (T0) and 7.83 (n = 18, SD = 2.55) at the posttest stages (T1, on the completion of the ETAFB intervention), where t (17) = 9.24, and p < .001 at the 5% significance level. Significant improvements in the participants' social interaction anxiety were observed. The results revealed that the pretest and posttest SIAS scores differed significantly, with means of 35.28 (n = 18, SD = 3.32) at the pretest (T0) and 33.11 (n = 18, SD = 2.44) at the posttest stages (T1, on the completion of the ETAFB intervention), where t (18) = 4.17, and p < .001 at the 5% significance level. All null hypotheses were rejected.

An objective of this pilot study was to examine the preliminary effects of the ETAFB protocol. Several significant changes were identified in within-group test score comparisons. Participants' scores for some subscales in the PWI-SC (achieving in life, personal relationships, community-connectedness, and future security), GHQ-12, and SIAS increased after the intervention. The findings supported the hypothesis and indicated that emotional distress improved among youth. This result suggests that engagement with textile art is a continual process involving goal setting, controlling external conditions, and meeting aims (Bailey & Fernando, 2012; Pöllänen, 2015). Based on the high completion rate, attendance rate, and significant scores collected from the study, although distressed youth tend to be uninterested in seeking help from adults (Riley, 2001), the retention rate was high, at 100%. Based on the results of the pilot study, three areas with corresponding significant improvements were identified: a) impacts on social interaction, b) impacts on general health, and c) achievement in the future direction.

Impacts on social interaction: A significant improvement in participants' scores in the PWI-SC (personal relationships and community connections) and the SIAS was observed after the intervention. Studies have demonstrated that youth with emotional distress are more sensitive to how others perceive them (Schwartz, 2018). The use of art therapy may improve social behaviour, focus span, and relaxation (Pioch, 2010). A study by Menzer (2015) found that participants engaged in various arts activities (such as singing, dancing, play-acting, and crafting) at an early age exhibited positive social and emotional behaviour, including empathy, sharing, and the ability to control emotions. Crafts have been integrated as a means of community-establishing and a source of mutual support, recognition, and sharing of ideas (Orton-Johnson, 2012; von Busch, 2013). Group crafting fosters a sense of belonging and cohesion within the group (Palmer & Kawakami, 2014). Sharing and celebrating one's efforts with others and finding support in a community can be beneficial to one's sense of agency and self-esteem (Mayne, 2016, 2020). By participating in the ETAFB intervention, youth could socialize, express themselves, and share their experiences regarding their emotional states in with their group members, improving their psychological well-being.

Impacts on general health: Within-group test score comparisons showed significant improvement in participants' GHQ-12 scores. The GHQ-12 is used to assess symptom levels of anxiety and depression in the general population (Baksheev et al., 2011). A statistically significant decrease in the mean total scores was observed in the EG after the intervention, indicating that the intervention reduced anxiety and depression levels in this group. Leisure activities have been shown to reduce aggression, anxiety, stress, and depression (Clave-Brule et al., 2009; Iso-Ahola & Mannell, 2004). Art therapy can reduce problem behaviours, depression, and anxiety (Cobbett, 2016; Mueller et al., 2010; Rowe et al., 2016; Ispanovic- Radojkovic, 2004). According to Başl et al., art therapy was applied to 21 volunteer youth with positive results. Depression and anxiety levels were significantly reduced, and quality-of-life scores improved (Başlı, 2020). Moreover, a study of 42 youth participating in an art therapy programme in school or under a control condition found that the treatment group was more likely to experience reductions in behavioural difficulties and emotional symptoms than the control group (Quinlan et al., 2016). According to these findings, art therapy reduces stress, anxiety, and depression in individuals regardless of their medical diagnoses or socioeconomic status. Thus, in the present study, youth depression and anxiety levels decreased due to the ability to share and solve their problems with others and interact with others in a codesign setting.

Achievement in the future direction: Following the intervention, significant changes were observed in participants' scores for some subscales of the PWI-SC (achieving in life and future security) within groups. Due to the ETAFB intervention, the participants were more satisfied with their lives and found a sense of purpose for the future. When youth experience emotional distress, their plans and expectations for the future are altered. Youth experience anxiety and worry when considering their futures. A textile art and craft goal can assist individuals in achieving personal life and health goals and empower them through handling and assembling raw materials (Diener, 2000). Most craft practitioners continue their leisure activities throughout their lives and into old age (Kenning, 2015; Lamont & Ranaweera, 2019; Maidment & Macfarlane, 2011). Furthermore, crafting is an empowering exercise of social agency, providing a sense of continuity and support during life transitions (Kenning, 2015). According to the literature, individuals who can

© 2023 Global Journals

overcome problems have greater satisfaction with their lives (İnce, 2015).

In this pilot study, participants used expressive textile art and fashion-based activities to reduce emotional distress. The findings from the intervention evaluation of the ETAFB intervention suggest that this had some empowering effects from which the participants benefitted regarding social interaction, general health, including depression and anxiety, and achievement in the future direction.

IV. Conclusions and Limitations

a) *Limitations*

The study has some limitations worth acknowledging. First, the current study was limited by its small sample and because the participants were recruited from a single NGO centre, decreasing the generalizability of the findings. Analytically, despite the value of recruiting a difficult-to-reach sample, the analysis was limited by its sample size. Future studies could more effectively evaluate the effectiveness of the intervention, for example, by using multivariate statistical tests with larger sample sizes. Second, the analysis lacked a control group (CG). Although this is not uncommon in evaluation studies on interventions (Blanchard et al., 2020), this prevented testing of what would have happened to participants had the programme not been provided. Therefore, the intervention effectiveness cannot be fully verified and warrants further testing. Future studies are encouraged to include a CG and random assignment procedure. Thirdly, measurements to assess and understand the participants' experiences and determine the efficacy of the intervention model were lacking.

A validated scale focusing on self-expression and emotion regulation would be necessary to monitor how the ETAFB intervention was received. A specific scale is necessary for evaluating art therapy in multidisciplinary programmes to identify its contribution within the broader programme. Since the results would be more isolated, they might provide situation- specific information. By interfering in certain aspects, assessing the outcomes, or both, it is feasible to evaluate and improve the quality of art therapy. In-depth interviews should also be conducted to understand the participants' experiences. Participants will be asked to reflect on the experiences of the workshops and arouse emotions during the creation process. The in-depth interview aims to understand the contextual factors that could determine the trial results, insights, and participants' experiences in the intervention (Fetters et al., 2013).

b) *Conclusions*

The use of textile art and fashion is unique to expressive art intervention practice. It is not yet sufficiently researched for that reason, despite its potentially enormous implications for art therapy practice. The need for in-depth research on ETAFB intervention is critical for practitioners to introduce the intervention worldwide. Similarly, limited guidelines from professional associations and the importance of more specific technology-oriented ethical codes for practitioners are frequently highlighted. Based on the results from the pilot study, the following suggestions should be applied to other similar studies. First, due to the small sample size and homogeneous sample composition, these findings may need to be more generalizable. Because age and ethnicity were controlled in this study, the results do not apply to youth from different cultural backgrounds or younger and older youth at different developmental stages. The main study needs to expand the ETAFB programme to other age groups, both younger and older. It would be highly beneficial to build a database of findings that could be generalized across populations. Furthermore, youth could be recruited from different organizations and secondary schools in Hong Kong to obtain diverse samples. Youth with developmental disabilities and diverse socioeconomic and ethnic backgrounds should also be included. Second, a CG would be used to establish causality by isolating the effect of an independent variable. Control groups can significantly strengthen a study's findings by providing the researcher with a means of determining whether the treatment under investigation truly impacts the experimental group. Third, the Self-Expression and Emotion Regulation in Art Therapy Scale (SERATS; Haeyen, 2017)) would be added as an outcome measurement in the main study to assess and understand the participants' experiences and determine the efficacy of the intervention model. Finally, in-depth interviews would be conducted to understand the participants' experiences and determine the intervention model's efficacy. The mixed methods case study framework can provide a comprehensive understanding of the effectiveness of the theoretical model. A qualitative approach using in- depth interviews allowed youth to report on how, why, and which specific area within the interventions was helpful in addressing their emotion-related experiences.

The results of this pilot research indicate that the ETAFB intervention is a feasible and acceptable care intervention for youth experiencing emotional distress. The intervention equips youth with textile arts and fashion-based abilities to regulate negative emotions, empowering them to confront daily challenges. The preliminary findings revealed that the ETAFB is an effective intervention for improving youth well- being, promoting their general health, and eliminating overall social anxiety.

© 2023 Global Journals

References Références Referencias

1. American Art Therapy Association. *What is art therapy.* (2013). Retrieved January 25, 2023, from http://www.arttherapy.org/upload/whatisarttherapy.pdf
2. American Art Therapy Association (2017). *Definition of Art.* Retrieved January 25, 2023, from https://arttherapy.org/about-art-therapy/
3. Atkins, S. S. (2002, December 15). *Expressive Arts Therapy: Creative Process in Art and Life.* Parkway Pub.
4. Bailey, A. W., & Fernando, I. K. (2012). Routine and project-based leisure, happiness, and meaning in life. *Journal of Leisure Research*, *44*(2), 139–154. https://doi.org/10.1080/00222216.2012.11950259
5. Baksheev, G. N., Robinson, J., Cosgrave, E. M., Baker, K., & Yung, A. R. (2011). Validity of the 12-item General Health Questionnaire (GHQ-12) in detecting depressive and anxiety disorders among high school students. *Psychiatry research, 187*(1-2), 291–296. https://doi.org/10.1016/j.psychres.2010.10.010
6. Baptist Oi Kwan Social Service. (2022, September 25). *中學生抑鬱焦慮狀況調查 2022*. Retrieved January 25, 2023, from https://www.bokss.org.hk/content/press/306/%E4%B8%AD%E5%AD%B8%E7%94%9F%E6%8A%91%E9%AC%B1%E7%84%A6%E6%85%AE%E8%AA%BF%E6%9F%A5%E6%96%B0%E8%81%9E%E7%A8%BF2022.pdf
7. Başlı, E. (2020). The effect of art therapy techniques on depression, anxiety levels and quality of life in the adolescent with type 1 diabetes mellitus: Preliminary study. Erciyes *Medical Journal*. https://doi.org/10.14744/etd.2020.45548
8. Bell, C. E., & Robbins, S. J. (2007). Effect of art production on negative mood: A randomized, controlled trial. *Art Therapy*, *24*(2), 71–75. https://doi.org/10.1080/07421656.2007.10129589
9. Blanchard, J., Johnson, C., McIntyre, M., Crowcroft, N. S., & McLellan, A. (2020). A pre and post intervention study measuring the effect of interactive education on adolescent perceptions of vaccines, vaccine safety and disease risk. *Journal of Public Health (Oxford, England), 42*(3), e272–e277. https://doi.org/10.1093/pubmed/fdz089
10. Bould, H., Mars, B., Moran, P., Biddle, L., & Gunnell, D. (2019). Rising suicide rates among adolescents in England and Wales. *The Lancet*, *394*(10193), 116–117. https://doi.org/10.1016/s0140-6736(19)31102-x
11. Braus, M., & Morton, B. (2020). Art therapy in the time of covid-19. *Psychological Trauma: Theory, Research, Practice, and Policy*, *12*(S1). https://doi.org/10.1037/tra0000746
12. British Association of Art Therapists (2022). *What is Art Therapy?* Retrieved January 25, 2023, from https://www.baat.org/About-Art-Therapy
13. Browne, A., & Rhodes, P. (2011). (rep.). *Stitching a Future - an Evaluation of Fine Cell Work*. Qaresearch. Retrieved January 25, 2023, from http://www.artsevidence.org.uk/media/uploads/evaluation-downloads/fine-cell- work-stitching-a-future-2011.pdf.
14. Burns, P., & Van Der Meer, R. (2020). Happy hookers: Findings from an international study exploring the effects of crochet on Wellbeing. *Perspectives in Public Health*, *141*(3), 149–157. https://doi.org/10.1177/1757913920911961
15. Burt, E. L., & Atkinson, J. (2011). The relationship between Quilting and Wellbeing. *Journal of Public Health*, *34*(1), 54–59. https://doi.org/10.1093/pubmed/fdr041
16. Casey, D. M., Ripke, M. N., & Huston, A. C. (2005). *Activity participation and the well-being of children and adolescents in the context of welfare reform. In J. L. Mahoney, R. W. Larson, & J. S. Eccles (Eds.)*, Organized activities as contexts of development, 65–84. Mahwah, NJ: Lawrence Erlbaum.
17. Canfield, J. (1989, October 24). *How to Build High Self-Esteem: A Practical Process for Your Personal Growth*. Nightingale Conant Corporation.
18. Chan, B. C., Pong, C. Y., Wong, S., Cheung, A., So, H., & Li, Q. (2018, March). *Arts Innovation Research Series II: Celebrating the Inclusion Power of Arts.* HK: OHKF
19. Chapman, L., Morabito, D., Ladakakos, C., Schreier, H., & Knudson, M. M. (2001). The effectiveness of art therapy interventions in reducing post-traumatic stress disorder (PTSD) symptoms in pediatric trauma patients. *Art Therapy*, *18*(2), 100–104. https://doi.org/10.1080/07421656.2001.10129750
20. Clave-Brule, M., Mazloum, A., Park, R. J., Harbottle, E. J., & Birmingham, C. L. (2009). Managing anxiety in eating disorders with knitting. *Eating and Weight Disorders - Studies on Anorexia, Bulimia and Obesity*, *14*(1). https://doi.org/10.1007/bf03354620
21. Cobbett S. 2016. Reaching the hard to reach: Quantitative and qualitative evaluation of school-based arts therapies with young people with social, emotional, and behavioural difficulties. *Emotional and Behavioural Difficulties, 21*, 403-415.
22. Cohen, J. (1988). *Statistical Power Analysis for the Behavioral Sciences (2nd Edition) (2nd ed.).* Routledge.
23. Cohen-Yatziv, L., & Regev, D. (2019). The effectiveness and contribution of art therapy work with children in 2018 -what progress has been made so far? A systematic review. *International Journal of Art Therapy*, *24*(3), 100–112. https://doi.org/10.1080/17454832.2019.1574845

© 2023 Global Journals

24. Collier, A. F. (2011). The well-being of women who create with textiles: Implications for art therapy. *Art Therapy, 28*(3), 104–112. https://doi.org/10.1080/07421656.2011.597025
25. Corkhill, B., Hemmings, J., Maddock, A., & Riley, J. (2014). Knitting and well-being. *TEXTILE*, *12*(1), 34–57. https://doi.org/10.2752/175183514x13916051793433
26. Cortina, M. A., & Fazel, M. (2015). The art room: An evaluation of a targeted school- based group intervention for students with emotional and behavioural difficulties. *The Arts in Psychotherapy*, *42*, 35–40. https://doi.org/10.1016/j.aip.2014.12.003
27. Cummins, R. A., & Lau, A. (2005). *Manual: Personal wellbeing index – School children (3rd edn).* Resource document. Melbourne, Australia: Australian Centre on Quality of Life, Deakiz University. http://www.deakin.edu.au/research/acqol/auwbi/index-translations/wbi-school-english.pdf. Accessed 15 June 2012.
28. Desmarais, S. (2016). *Affective materials: a processual, relational, and material ethnography of amateur group crafts practice in two arts-for-health settings* (thesis). Retrieved from https://www.academia.edu/30736990/Affective_materials_a_processual_relatio nal_and_material_ethnography_of_amateur_group_crafts_practice_in_two_arts_for_health_settings.
29. *Developmental disabilities*. Society of Pediatric Psychology. (2021, March 10). Retrieved January 25, 2023, from https://pedpsych.org/fact_sheets/developmental_disabilities/
30. Diener, E. (2000). Subjective well-being: The science of happiness and a proposal for a national index. *American Psychologist*, *55*(1), 34–43. https://doi.org/10.1037/0003-066x.55.1.34
31. Save the Children Hong Kong (2020). *Mental health matters: Protect children's well- being in Hong Kong.* Save the Children's Resource Centre. Retrieved January 25, 2023, from https://resourcecentre.savethechildren.net/document/mental-health-matters-protect-childrens-well-being-hong-kong/
32. Dubler, M. L., & Gurel, L. M. (1984). Depression: Relationships to clothing and appearance self-concept. *Home Economics Research Journal*, *13*(1), 21–26. https://doi.org/10.1177/1077727x840130010 4
33. Duffy, K. (2007). Knitting through recovery one stitch at a time. *Journal of Groups in Addiction & Recovery*, *2*(1), 67–83. https://doi.org/10.1300/j384v02n01_04
34. Dunphy, K., Baker, F. A., Dumaresq, E., Carroll-Haskins, K., Eickholt, J., Ercole, M., Kaimal, G., Meyer, K., Sajnani, N., Shamir, O. Y., & Wosch, T. (2019). Creative arts interventions to address depression in older adults: A systematic review of outcomes, processes, and mechanisms. *Frontiers in Psychology, 9*. https://doi.org/10.3389/fpsyg.2018.02655
35. Eccles, J. S., Midgley, C., Wigfield, A., Buchanan, C. M., Reuman, D., Flanagan, C., & Mac Iver, D. (1997). Development during adolescence: The impact of stage– environment fit on young adolescents' experiences in schools and in families (1993). *The Evolution of Psychology: Fifty Years of the American Psychologist.*, 475–501. https://doi.org/10.1037/10254-034
36. Faller, H., & Schmidt, M. (2004). Prognostic value of depressive coping and depression in survival of lung cancer patients. *Psycho-Oncology*, *13*(5), 359–363. https://doi.org/10.1002/pon.783
37. Fetters, D., Curry, A. & Creswell, W. (2013). Achieving integration in mixed methods designs-principles and practices. *Health services research, 48* (6pt2), 2134-2156.
38. Fergusson, D. M., & Woodward, L. J. (2002). Mental health, educational, and social role outcomes of adolescents with depression. *Archives of General Psychiatry*, *59*(3), 225. https://doi.org/10.1001/archpsyc.59.3.225
39. Fisher, B. J. (1995). Successful aging, life satisfaction, and generativity in later life. *The International Journal of Aging and Human Development*, *41*(3), 239–250. https://doi.org/10.2190/ha9x-h48d-9gyb-85xw
40. Futterman Collier, A. D., Wayment, H. A., & Birkett, M. (2016). Impact of making textile handcrafts on mood enhancement and inflammatory immune changes. *Art Therapy, 33*(4), 178–185. https://doi.org/10.1080/07421656.2016.1226647
41. GABRIEL, Z. A. H. A. V. A., & BOWLING, A. N. N. (2004). Quality of life from the perspectives of older people. *Ageing and Society*, *24*(5), 675–691. https://doi.org/10.1017/s0144686x03001582
42. Gardner, H. (1990). *Art education and human development*. Los Angeles, CA: J. Paul Getty Trust.
43. Garlock, L. R. (2016). Stories in the cloth: Art therapy and narrative textiles. *Art Therapy, 33*(2), 58–66. https://doi.org/10.1080/07421656.2016.1164004
44. Gibson, H. J. (1997). Henderson, Karla; Bialeschki, M. Deborah; Shaw, Susan M.; and Freysinger, Valeria J. (1996). *both gains and gaps: Feminist Perspectives on Women's leisure*. *Journal of Leisure Research*, *29*(1), 141–144. https://doi.org/10.1080/00222216.1997.11949790
45. Goldberg, D., & Williams, P. (1988). *A user's guide to the General Health Questionnaire*. Windsor, UK: NFER-Nelson.
46. Gulliver, A., Griffiths, K. M., & Christensen, H. (2010). Perceived barriers and facilitators to mental health help-seeking in young people: A systematic review. *BMC Psychiatry*, *10*(1). https://doi.org/10.1186/1471-244x-10-113

© 2023 Global Journals

47. Haeyen, S., van Hooren, S., van der Veld, W. M., & Hutschemaekers, G. (2017). Measuring the contribution of art therapy in multidisciplinary treatment of personality disorders: The construction of the Self-expression and Emotion Regulation in Art Therapy Scale (SERATS). *Personality and Mental Health, 12*(1), 3–14. https://doi.org/10.1002/pmh.1379
48. Hankins, M. (2008). *The reliability of the Twelve-item General Health Questionnaire (GHQ-12) under realistic assumptions.* BMC Public Health, 8(1). https://doi.org/10.1186/1471-2458-8-355
49. Hitomi, M. (2023). *Why managing emotions is harder for ADHD and autistic children*. Mightier. Retrieved January 25, 2023 from https://www.mightier.com/resources/why-managing-emotions-is-harder-for-adhd-and-autistic-children/
50. Hong, Z. R., Lin, H. S., Wang, H. H., Chen, H. T., & Yu, T. C. (2012). The effects of functional group counseling on inspiring low-achieving students' self-worth and self-efficacy in Taiwan. *International Journal of Psychology, 47*(3), 179–191. https://doi.org/10.1080/00207594.2011.590494
51. Homer, E. S. (2015). Piece work: Fabric collage as a neurodevelopmental approach to trauma treatment. *Art Therapy, 32*(1), 20–26. https://doi.org/10.1080/07421656.2015.992824
52. İnce Ende Z, Tüfekci Güdücü F. *Evaluation of marital adjustment and life satisfaction in parents with children with disabilities and determination of the affecting factors*. Gümüşhane University J Health Sci. 2015; 4(1): 102- 112.
53. Irvin, P. J. (2014). *A retrospective study of the effects of art making on the well-being and levels of stress of pediatric patients suffering from chronic disease* (thesis).
54. Iso-Ahola, S. E., & Mannell, R. C. (2004). *Leisure and health. In T. Haworth & A. J. Veal (Eds.),* Work and leisure, 184–199. New York: Routledge.
55. Ispanovic-Radojkovic, V. (2004). Youth clubs: Psychosocial intervention to prevent mental health problems in adolescents. *PsycEXTRA Dataset*. https://doi.org/10.1037/e538802013-098
56. Iwasaki, Y. (2006). Leisure and quality of life in an international and multicultural context: What are major pathways linking leisure to quality of life? *Social Indicators Research*, *82*(2), 233–264. https://doi.org/10.1007/s11205-006-9032-z
57. Johnson, D., Dupuis, G., Piche, J., Clayborne, Z., & Colman, I. (2018). Adult mental health outcomes of Adolescent depression: A systematic review. *Depression and Anxiety*, *35*(8), 700–716. https://doi.org/10.1002/da.22777
58. Kagin, S. L., & Lusebrink, V. B. (1978). The expressive therapies continuum. *Art Psychotherapy*, *5*(4), 171–180. https://doi.org/10.1016/0090-9092(78)90031-5
59. Kahn, B. B. (1999). Art therapy with adolescents: Making it work for school counselors. *Professional School Counseling, 2*(4), 291. https://ezproxyles.flo.org/login?url=https://www.proquest.com/scholarly-journal s/art-therapy-with-adolescents-making-work-school/docview/213243491/se-2? accounted=12060
60. Kang, J.-Y. M., Johnson, K. K. P., & Kim, J. (2013). Clothing functions and use of clothing to alter mood. *International Journal of Fashion Design, Technology and Education, 6*(1), 43–52. https://doi.org/10.1080/17543266.2012.762428
61. Kenning, G. (2015). "Fiddling with Threads": Craft-based Textile Activities and Positive Well-being. Textile: the Journal of Cloth and Culture, 13(1), 50–65. https://doi.org/10.2752/175183515x14235680035304
62. Kerr, S., Johnson, V. K., Gans, S. E., & Krumrine, J. (2004). Predicting adjustment during the transition to college: Alexithymia, perceived stress, and psychological symptoms. *Journal of College Student Development*, *45*(6), 593–611. https://doi.org/10.1353/csd.2004.0068
63. Kessler, R. C., Berglund, P., Demler, O., Jin, R., Merikangas, K. R., & Walters, E. E. (2005). Lifetime prevalence and age-of-onset distributions of DSM-IV disorders in the national comorbidity survey replication. *Archives of General Psychiatry*, *62*(6), 593. https://doi.org/10.1001/archpsyc.62.6.593
64. Kouprie, M., & Visser, F. S. (2009). A framework for empathy in design: Stepping into and out of the user's life. *Journal of Engineering Design, 20*(5), 437–448. https://doi.org/10.1080/09544820902875033
65. Kim, S., Kim, G., & Ki, J. (2014). Effects of group art therapy combined with breath meditation on the subjective well-being of depressed and anxious adolescents. *The Arts in Psychotherapy*, *41*(5), 519–526. https://doi.org/10.1016/j.aip.2014.10.002
66. Kim, W. & Lee, S. (1999). Relationship between clothing behavior & depressive mood. *Journal of Korean Neuropsychiatric Association, 38* (6), 1245-1253.
67. LaBat, K.L. & Solkolowski, S.L. (1999). A three-stage design process applied to an industry-University textile product design project. *Clothing & Textiles Research Journal, 17*(1), 1-19.
68. Lamont, A., & Ranaweera, N. A. (2019). *Knit one, play one: Comparing the effects of amateur knitting and amateur music participation on happiness and wellbeing.* Applied Research in Quality of Life, Online 29 May 2019. Retrieved from http://eprints.keele.ac.uk/6424/1/Lamont-Ranaweera-2019-Article-Knit-One-Play-One-Comparing-The-Effe.pdf
69. Leone, L. (2020). *Craft in Art Therapy: Diverse Approaches to the Transformative Power of Craft Materials and Methods (1st ed.)*. Routledge.

© 2023 Global Journals

70. Maidment, J., & Macfarlane, S. (2011). Crafting communities: Promoting inclusion, empowerment, and learning between older women. *Australian Social Work*, *64*(3), 283–298. https://doi.org/10.1080/0312407x.2010.520087
71. Maslach, C., & Leiter, M. P. (2016). Burnout. *Stress: Concepts, Cognition, Emotion, and Behavior*, 351–357. https://doi.org/10.1016/b978-0-12-800951-2.00044-3
72. Mattick, R. P., & Clarke, J. C. (1998). Development and validation of measures of social phobia scrutiny fear and social interaction anxiety. *Behavioral Research and Therapy, 36*(4), 455-470. https://doi.org/10.1016/s0005-7967(97)10031-6
73. Mayne, A. (2016). Feeling lonely, feeling connected: Amateur knit and crochet makers online. *Craft Research,* 7(1), 11–29. https://doi.org/10.1386/crre.7.1.11_1
74. Mayne, A. (2020). Make/share: Textile making alone together in private and social media spaces. *Journal of Arts & Communities, 10*(1–2), 95–108. https://doi.org/10.1386/jaac_00008_1
75. Mazzucchelli, T. G., & Sanders, M. R. (2011). Preventing behavioural and emotional problems in children who have a developmental disability: A Public Health Approach. *Research in Developmental Disabilities*, *32*(6), 2148–2156. https://doi.org/10.1016/j.ridd.2011.07.022
76. McIntyre, P. (2002). (rep.). *Adolescent friendly health services – an agenda for change*. World Health Organization. Retrieved from https://apps.who.Int/iris/bitstream/handle/10665/67923/WHO_FCH_CAH_02.1 4.pdf?sequence=1&isAllowed=y.
77. Menzer, Melissa. 2015. *The Arts in Early Childhood: Social and Emotional Benefits of Arts Participation.* A Literature Review and Gap-Analysis (2000–2015). Washington, D.C.: National Endowment for the Arts.
78. Moon, B. L. (2012). *The dynamics of art as therapy with adolescents (2nd ed.).* Charles C. Thomas.
79. Moore A, Gammie J (2018) *Revealed: hundreds of children wait more than a year for specialist help.* Health Service J. https://www.hsj.co.uk/quality-and-performance/revealed-hundreds-of-children-wait-more-than-a-year-for-specialist-help/7023232.article
80. Morie, K. P., Jackson, S., Zhai, Z. W., Potenza, M. N., & Dritschel, B. (2019). Mood disorders in high-functioning autism: The importance of alexithymia and emotional regulation. *Journal of Autism and Developmental Disorders*, *49*(7), 2935–2945. https://doi.org/10.1007/s10803-019-04020-1
81. Mueller, J., Alie, C., Jonas, B., Brown, E., & Sherr, L. (2010). A quasi-experimental evaluation of a community-based art therapy intervention exploring the psychosocial health of children affected by HIV in South Africa. *Tropical Medicine & International Health*, *16*(1), 57–66. https://doi.org/10.1111/j.1365-3156.2010.02682.x
82. Nainis, N., Paice, J. A., Ratner, J., Wirth, J. H., Lai, J., & Shott, S. (2006). Relieving symptoms in cancer: Innovative use of art therapy. *Journal of Pain and Symptom Management*, *31*(2), 162–169. https://doi.org/10.1016/j.jpainsymman.2005.07.006
83. O'Neill, A., Stapley, E., Stock, S., Merrick, H., & Humphrey, N. (2021). Adolescents' understanding of what causes emotional distress: A qualitative exploration in a non-clinical sample using ideal-type analysis. *Frontiers in Public Health*, *9*. https://doi.org/10.3389/fpubh.2021.673321
84. Orton-Johnson, K. (2012). Knit, purl and upload: New Technologies, Digital Mediations and the experience of Leisure. *Leisure Studies*, *33*(3), 305–321. https://doi.org/10.1080/02614367.2012.723730
85. Owens, T. J., Shippee, N. D., & Hensel, D. J. (2008). Emotional distress, drinking, and academic achievement across the adolescent life course. *Journal of Youth and Adolescence*, *37*(10), 1242–1256. https://doi.org/10.1007/s10964-008-9319-2
86. Palmer, D. A., & Kawakami, A. (2014). Tie formation and cohesiveness in a loosely organized group: Knitting together. *The Qualitative Report, 19*(41), 1–15. https://nsuworks.nova.edu/tqr/vol19/iss41/1
87. Pioch, A. (2010). Vaktherapie in een leeromgeving: Projectverslag en onderzoekstraject [Arts therapies in a learning community: Report and research plan]. Groningen, The Netherlands: RENN4, Vaktherapie/Sensor
88. Pöllänen, S. (2015). Elements of crafts that enhance well-being. *Journal of Leisure Research, 47*(1), 58–78. https://doi.org/10.1080/00222216.2015.11950351
89. Quinlan, R., Schweitzer, R. D., Khawaja, N., & Griffin, J. (2016). Evaluation of a school-based Creative Arts Therapy Program for adolescents from refugee backgrounds. *The Arts in Psychotherapy, 47*, 72–78. https://doi.org/10.1016/j.aip.2015.09.006
90. Radez, J., Reardon, T., Creswell, C., Lawrence, P. J., Evdoka-Burton, G., & Waite, P. (2020). Why do children and adolescents (not) seek and access professional help for their mental health problems? A systematic review of Quantitative and Qualitative Studies. *European Child & Adolescent Psychiatry*, *30*(2), 183–211. https://doi.org/10.1007/s00787-019-01469-4
91. Radloff, L. S. (1977). The CES-D scale. *Applied Psychological Measurement*, *1*(3), 385–401. https://doi.org/10.1177/014662167700100306
92. Reynolds, F. (2000). Managing depression through needlecraft creative activities: A qualitative study. *The Arts in Psychotherapy, 27*(2), 107–114. https://doi.org/10.1016/s0197-4556(99)00033-7
93. Reynolds, F. (2010). 'colour and communion': Exploring the influences of visual art- making as a leisure activity on older women's subjective well-

© 2023 Global Journals

being. *Journal of Aging Studies*, *24*(2), 135–143. https://doi.org/10.1016/j.jaging.2008.10.004
94. Rowe, C., Watson-Ormond, R., English, L., Rubesin, H., Marshall, A., Linton, K., Amolegbe, A., Agnew-Brune, C., & Eng, E. (2016). Evaluating art therapy to heal the effects of trauma among refugee youth. *Health Promotion Practice*, *18*(1), 26–33. https://doi.org/10.1177/1524839915626413
95. Riley, J., Corkhill, B., & Morris, C. (2013). The benefits of knitting for personal and social wellbeing in adulthood: Findings from an international survey. *British Journal of Occupational Therapy*, *76*(2), 50–57. https://doi.org/10.4276/030802213x13603244419077
96. Riley, S. (2001). Art therapy with adolescents. *Western Journal of Medicine*, *175*(1), 54–57. https://doi.org/10.1136/ewjm.175.1.54
97. Rubin, H. J., & Rubin, I. S. (2005). *Qualitative interviewing: The Art of Hearing Data*. SAGE.
98. Sandmire, D. A., Gorham, S. R., Rankin, N. E., & Grimm, D. R. (2012). The influence of art making on anxiety: A pilot study. *Art Therapy*, *29*(2), 68–73. https://doi.org/10.1080/07421656.2012.683748
99. Sawyer, M. G., Arney, F. M., Baghurst, P. A., Clark, J. J., Graetz, B. W., Kosky, R. J., Nurcombe, B., Patton, G. C., Prior, M. R., Raphael, B., Rey, J. M., Whaites, L. C., & Zubrick, S. R. (2001). The mental health of young people in Australia: Key findings from the child and adolescent component of the National Survey of Mental Health and well-being. *Australian & New Zealand Journal of Psychiatry*, *35*(6), 806–814. https://doi.org/10.1046/j.1440-1614.2001.00964.x
100. Schofield-Tomschin, S., & Littrell, M. A. (2001). Textile Handcraft Guild Participation: A conduit to successful aging. *Clothing and Textiles Research Journal*, *19*(2), 41–51. https://doi.org/10.1177/0887302x0101900201
101. Schwartz, S. J., & Petrova, M. (2018). Fostering healthy identity development in adolescence. *Nature Human Behaviour, 2*(2), 110–111. https://doi.org/10.1038/s41562-017-0283-2
102. Setterington, L., & Millar, L. (2018). *Hidden values and points of tension in shared embroidery practice* (thesis). University of Brighton.
103. Shercliff, E. (2014). *Articulating stitch: Skilful hand-stitching as personal, social and cultural experience* (thesis). Royal College of Art.
104. Tomás, J. M., Gutiérrez, M., & Sancho, P. (2017). Factorial validity of the General Health Questionnaire 12 in an angolan sample. *European Journal of Psychological Assessment, 33*(2), 116–122. https://doi.org/10.1027/1015-5759/a000278
105. Tubbs, C., & Drake, M. (2017). *Crafts and creative media in therapy*. Slack Incorporated.
106. Utsch, H., & Ellenhorn, T. J. (2007). *Knitting and stress reduction.* Thesis (Psy.D.) -- Antioch New England Graduate School, 2007.
107. Van den Bergh, B. R. H., Van Calster, B., Pinna Puissant, S., & Van Huffel, S. (2008). Self-reported symptoms of depressed mood, trait anxiety and aggressive behavior in post-pubertal adolescents: Associations with diurnal cortisol profiles. *Hormones and Behavior*, *54*(2), 253–257. https://doi.org/10.1016/j.yhbeh.2008.03.015
108. Verbakel, E. (2012). Leisure values of Europeans from 46 countries. *European Sociological Review*, *29*(3), 669–682. https://doi.org/10.1093/esr/jcs046
109. Von Busch, O. (2013). Collaborative craft capabilities: The bodyhood of shared skills. *The Journal of Modern Craft, 6*(2), 135–146. https://doi.org/10.2752/174967813X13703633980731
110. World Health Organization. (2012). *Making health services adolescent friendly: developing national quality standards for adolescent friendly health services*. Switzerland. Retrieved January 25, 2023, from https://apps.who.int/iris/bitstream/handle/10665/75217/9789241503594_eng.pdf.
111. World Health Organization. (2023). *Child and adolescent mental and brain health.* World Health Organization. Retrieved January 25, 2023, from https://www.who.int/activities/improving-the-mental-and-brain-health-of-children-and-adolescents
112. Ye, S. (2009). *Factor structure of the General Health Questionnaire (GHQ-12): The role of wording effects.* Personality and Individual Differences, 46(2), 197–201. https://doi.org/10.1016/j.paid.2008.09.027

© 2023 Global Journals

Global Journal of human-social science: a
Arts & Humanities - Psychology
Volume 23 Issue 3 Version 1.0 Year 2023
Type: Double Blind Peer Reviewed International Research Journal
Publisher: Global Journals
Online ISSN: 2249-460x & Print ISSN: 0975-587X

The Right of Ownership Accruing to the Religious According to the Code of Canon Law. An Outline

By Bartosz Rakoczy & Krzysztof Bukowski

Nicolaus Copernicus University in Toruń

Introduction- The religious state is essentially neither laity nor clergy. It is deemed the third state specifically bound by the evangelical counsels of obedience, chastity and poverty[1]. From the analysed point of view, the evangelical counsel of poverty, and partly obedience, has special importance.

The essence of the evangelical counsel of poverty is how the individual practising it sees temporal possessions. There is no doubt that this primarily concerns the spiritual aspect, but the evangelical counsel of poverty also has a legal dimension.

The evangelical counsel of poverty refers to all legal relationships concerning temporal possessions. However, its most significant and spectacular concern is the right of ownership accruing to the religious.

Indeed, ownership is by its very nature the most extensive right to a particular item (goods), hence constituting the most essential part of the evangelical counsel of poverty.

This paper analyses how and why the evangelical counsel of poverty, taking the form of the vow of poverty, affects and determines the right to ownership accruing to the religious. It investigates whether and how the right to ownership accruing to the religious is limited and divested.

GJHSS-A Classification: *FOR Code: 2204*



Strictly as per the compliance and regulations of:

© 2023. Bartosz Rakoczy & Krzysztof Bukowski. This research/review article is distributed under the terms of the Attribution-NonCommercial-NoDerivatives 4.0 International (CC BY-NC-ND 4.0). You must give appropriate credit to authors and reference this article if parts of the article are reproduced in any manner. Applicable licensing terms are at https://creativecommons.org/licenses/by-nc-nd/4.0/.

The Right of Ownership Accruing to the Religious According to the Code of Canon Law. An Outline

Bartosz Rakoczy [α] & Krzysztof Bukowski [σ]

I. Introduction

The religious state is essentially neither laity nor clergy. It is deemed the third state specifically bound by the evangelical counsels of obedience, chastity and poverty[1]. From the analysed point of view, the evangelical counsel of poverty, and partly obedience, has special importance.

The essence of the evangelical counsel of poverty is how the individual practising it sees temporal possessions. There is no doubt that this primarily concerns the spiritual aspect, but the evangelical counsel of poverty also has a legal dimension.

The evangelical counsel of poverty refers to all legal relationships concerning temporal possessions. However, its most significant and spectacular concern is the right of ownership accruing to the religious.

Indeed, ownership is by its very nature the most extensive right to a particular item (goods), hence constituting the most essential part of the evangelical counsel of poverty.

This paper analyses how and why the evangelical counsel of poverty, taking the form of the vow of poverty, affects and determines the right to ownership accruing to the religious. It investigates whether and how the right to ownership accruing to the religious is limited and divested.

II. The Concept of the Right of Ownership Accruing to the Religious According to Canon 668 of CCL. A General Outline

A natural consequence of practising the evangelical counsel of poverty by the religious state is the regulation of the relationship between the religious and temporal goods by law. A common legal norm for all the religious is Canon 668 of the Code of Canon Law [2], reading "§ 1. Before first profession, members are to cede the administration of their goods to whomever they prefer and, unless the constitutions state otherwise, are to make disposition freely for their use and revenue. Moreover, at least before perpetual profession, they are to make a will which is to be valid also in civil law.

§ 2. To change these dispositions for a just cause and to place any act regarding temporal goods, they need the permission of the superior competent according to the norm of proper law.

§ 3. Whatever a religious acquires through personal effort or by reason of the institute, the religious acquires for the institute. Whatever accrues to a religious in any way by reason of pension, subsidy, or insurance is acquired for the institute unless proper law states otherwise.

§ 4. A person who must renounce fully his or her goods due to the nature of the institute is to make that renunciation before perpetual profession in a form valid, as far as possible, even in civil law; it is to take effect from the day of profession. A perpetually professed religious who wishes to renounce his or her goods either partially or totally according to the norm of proper law and with the permission of the supreme moderator is to do the same.

§ 5. A professed religious who has renounced his or her goods fully due to the nature of the institute loses the capacity of acquiring and possessing and therefore invalidly places acts contrary to the vow of poverty. Moreover, whatever accrues to the professed after renunciation belongs to the institute according to the norm of proper law".

Interestingly, Canon 668 does not use the terms 'ownership' and 'right of ownership' at all. This provision does not refer to the rights of the religious but rather to performing particular legal acts (legal transactions) regarding temporal goods (assets).

However, Canon 668 provide for far-reaching consequences also, and perhaps most importantly, for the right to ownership accruing to the religious. Although this provision encompasses more than this, I will focus

Author α: Professor Doctor Habilitated in Environmental Protection Law, Head of the Chair of Environmental Protection Law, and Public Economic Law at the Nicolaus Copernicus University in Toruń, Legal Adviser. e-mail: rakoczy_bukowski_kanc@wp.pl

[1] J. Aumann, Zarys historii duchowości, Kielce 2003, p. 36; J. Małecki, Zakony męskie w Polsce. Słownik, ed. 2, Kraków 2000, p. 89.

[2] Codex Iuris Canonici, auctoritate Joannis Pauli II PP promulgates, hereinafter Code of Canon Law (CCL).

© 2023 Global Journals

exclusively on the right of ownership. Canon 668 gives rise to very significant divisions and classifications[3].

First and foremost, in this provision, the lawmaker makes a clear distinction between the legal status of the religious who have not taken their perpetual vows yet and those who have already taken such vows. The first is covered by § 1, and other provisions refer to the perpetual profession.

This division is significant for exercising the right of ownership since the canon law institution of renouncing goods applies to perpetual profession only. However, § 1 implies that a religious who has not taken perpetual vows only has a legal obligation to cede the administration of one's goods to another person.

Secondly, Canon 668 also distinguishes between two different forms of the vow of poverty. The first comprises a renouncement of goods. The legal obligation to renounce goods exists only if such renunciation is required due to the nature of the particular religious institute. Therefore, contrary to the common belief, not all the religious must renounce their goods. This obligation does exist but only for members of religious institutes that require such renunciation of goods.

There is also a second option where a religious is not required to renounce goods but has a legal obligation to dispose of them subject to the permission of their superior.

The first solution is characteristic of monasteries, and the second of congregations, but this is not a juridical rule. Thirdly, the canon distinguishes between matters regulated by civil law and those regulated by the proper law (constitution) of the religious institution. Moreover, it makes several references to proper law in various contexts.

This shows that the lawmaker recognises the significant role of the proper law of the religious institute[4] However, there is nothing strange about adopting this solution as charisma is an essential element of a religious institute. Not only does the lawmaker accept but even expects variations between religious institutes. Thus, differences between religious institutes are completely natural and lead to variations in their proper law. It is the proper law that constitutes the essence and nature of the particular religious institute.

Po przeanalizowaniu zagadnień ogólnych regulowanych w kanonie 668 KPK przejść do kwestii bardziej szczegółowych.

III. Renunciation of Goods

In the context of Canon 668 of the Code of Canon Law, renunciation of goods seems a solution of canon law with the most far-reaching consequences, affecting the right of ownership, but it is also the most essential one.

The CCL itself formulated three conditions regarding the renunciation of goods, one of them being relative.

Firstly, renunciation of goods applies only to members of religious institutes that require renouncing them. Not every religious institute requires that renunciation. Thus, the obligation to renounce goods should expressly stem from the proper law of the religious institute.[5].

Secondly, renunciation refers to perpetual profession only, so a religious who has not taken perpetual vows cannot renounce goods even if the nature of the religious institute requires it. Simultaneously, the ecclesiastical lawmaker does not specify whether this concerns religious institutes of men or women[6].

The third condition is that goods should be renounced in a form valid even in civil law. However, this condition is relative as the ecclesiastical lawmaker underlines that this refers to a situation where the renunciation of goods is possible in terms of civil law. On the contrary, if civil law does not allow that renunciation, this condition does not need to be fulfilled[7].

It should be emphasised that the possibility to renounce goods will be essentially determined by civil law and not by canon law. If any institution (or institutions) of the particular legal system allows for the renunciation of goods, this condition should be by all means fulfilled. If, however, the legal system does not provide for such an option, the condition does not need to be fulfilled. A need for extended interpretation arises should be highlighted in this case. It is not only about the institution of renunciation of goods being strictly provided for by the particular system of civil law, but also about all institutions of civil law leading to the same

[3] More about this provision see R. Smith, [in:] J. p. Beal (ed.), J. A. Coriden (ed.), T. J. Green (ed.), New Commentary on the Code of Canon Law, edition 2, New York/Mahwah 2000, p. 834 et seq.; A. Benlloch Poveda (ed.), Código de derecho canónico, edition 12, Valencia 2002, p. 320; G. di Mattia, [in:] Exegetical Commentary on the Canon Law, v. II/2, Montreal/ Chicago 2004, p. 1783 et seq.; A. Chrapkowski, J. Krzywda, Komentarz do Kodeksu Prawa Kanonicznego, v. II/2, Warszawa 2006, p. 103 – 104; Codice di diritto canonico. Commentato, edition 3, Milano 2009, p. 594 et seq.; P. Majer (ed.), Kodeks Prawa Kanonicznego. Komentarz, edition 2, Warszawa 2023, p. 435;

[4] Vide J. Kałowski, Konstytucje i inne zbiory prawne instytutów życia konsekrowanego według Kodeksu Prawa Kanonicznego z 1983 r., PK 1986, v. 1-2, pp. 149-185.

[5] F. Bogdan, Prawo zakonów, instytutów świeckich i stowarzyszeń życia apostolskiego, Poznań 1988, p. 45

[6] B. W. Zubert, Instytuty życia konsekrowanego i stowarzyszenia życia apostolskiego, [in:] Komentarz do Kodeksu Prawa Kanonicznego z 1983 r., v. II/3, Lublin 1990, p. 67

[7] D. J. Andrés, Il diritto dei religiosi, Roma 1990, p. 78

© 2023 Global Journals

effect of the renunciation of goods as expected by the ecclesiastical lawmaker[8].

The lawmaker himself does not define renunciation of goods[9]. This term is sometimes defined in the proper law of the religious institute, but mostly by indicating the consequences of such renunciation. In Canon 668 § 5, the ecclesiastical lawmaker himself refers to the consequences of that renunciation.

As a fundamental legal consequence of the renunciation of goods, the religious lose all economic rights accruing to them upon making a perpetual profession, including the right to property. Therefore, from the analysed point of view, as a result of taking perpetual vows, the religious should renounce and lose the right to ownership of all assets, either immovable or movable. The loss of this right to ownership should be unconditional and irrevocable.

The ecclesiastical lawmaker is completely silent about specific items the property of the religious should renounce. This issue can be regulated by the proper law of the religious institute, but, in principle, proper law does not regulate it either. Thus, it is the religious who decide for whose benefit they can disown property accrued to them. No legal obstacles exist to renounce the goods for the benefit of the religious institute but this can also be done for the benefit of the family or any legal entity whatsoever.

Furthermore, renunciation of goods affects the ability to acquire them in the future. The religious will not be capable of acquiring such goods in the future. Civil law interprets the loss of this capacity, if any, in a completely different manner. Generally, the systems of secular law do not provide for the religious to lose their competence and legal capacity due to the renunciation of goods according to canon law.

After perpetual vows of poverty, all goods that the religious acquire in the future will accrue to the religious institute. The solution adopted by the ecclesiastical lawmaker results from the fact that the religious is not capable of acquiring such goods.

IV. Limitations on Exercising the Right of Ownership

As indicated above, Can. 668 par. 3 CCL required that the religious renounced the goods if so required by the nature of the religious institute. In contrast, if the obligation to renounce goods does not stem from the nature of the religious institute, the religious do not need to renounce them. Therefore, a question arises about what the vow of poverty really is.

If the nature of the religious institute does not imply a necessity to renounce goods, the vow of poverty does not deprive the religious of their right of ownership but makes the exercise of this right dependent on the permission of their superior.

No loss of the right of ownership whatsoever takes place here. The religious retains the right of ownership of all the goods that were their property upon making the perpetual profession. Furthermore, in contrast to a religious who renounced goods, not only does he/she keep the right of ownership but will be able to acquire it in the future, thus, remaining capable of acquiring the goods in the future. The CCL attaches the legal consequence being the loss of capacity to acquire goods only to the vows of poverty by which the goods are renounced.

In this case, however, the principle of Can. 668 CCL will apply – whatever a religious acquires (...), the religious acquires for the institute (*qui monachus aquirit, pro monasterio aquirit*). This means that, although the religious do not lose their capacity to acquire goods for themselves, this capacity remains fiction since everything they acquire for themselves, they will acquire for the religious institute.

Of course, this rule does not apply automatically, and not all the goods acquired by the religious immediately become the property of the religious institute by operation of the law alone. The religious will acquire the goods for themselves but will be obliged to assign these goods (items) to the religious institute. This is more about the obligation to transfer the right of ownership to the religious institute than about the effect of transferring the right of ownership by operation of the law alone. From the point of view of the religious institute, it can claim that the religious transfer the right of ownership acquired by the religious to that institute.

The religious, who have not renounced the goods due to the nature of their religious institute, will retain the right of ownership, but exercising this right will depend on the permission of their superior.

It should be highlighted that the right of ownership consists of several powers accruing to the owner. Listing these powers is pointless as their catalogue is not closed. The owner will certainly have the right of possession, use, the right to derive revenue, the right of administration, and disposal of such property etc.

However, the ecclesiastical lawmaker does not specify which powers of the religious depend on the permission of their superiors. He does not stipulate that the religious need the permission of their superior in exercising all the powers, which would be a general clause. The fact that the ecclesiastical lawmaker remains silent in that respect implies that it is the norm of the proper law of the religious institute that should regulate these issues specifically.

[8] B. Rakoczy, Cywilnoprawne skutki zrzeczenia się dóbr przez zakonnika w polskim prawie cywilnym. Zarys problematyki, Studia z Prawa Wyznaniowego, 2021, v. 24, pp. 171-185

[9] Vide V. de Paolis, I beni temporali della Chiesa, Bologna 2011, p. 56 et seq.

© 2023 Global Journals

Proper law should regulate three essential issues – which powers of the religious should depend on their superiors' permission, which superior is empowered to grant permission to exercise the rights, and what steps should the religious and the superior take to ensure that this permission is lawful. Whereas, in the latter case these could be general rules of permission granted by superiors and not only regulations concerning property. Of course, proper law can regulate the superior's permission in matters related to property separately, irrespective of the general rules adopted in that proper law.

V. The Right of Ownership Accruing to Religious in Temporary Vows

The right of ownership accruing to a religious who has taken temporary vows only is regulated separately by Canon 668 § 1. This provision implies that such a religious does not lose the right of ownership. The lawmaker only requires them to cede the administration of their assets to another person. No change in ownership occurs in the case of a religious who has not taken perpetual vows. They remain the owner, so they retain the right of ownership of movable and immovable assets

However, entrusting the administration of such assets to another person deprives the religious who have taken temporary vows of certain powers making up the right of ownership. Indeed, they are deprived of the right of possession, and the right to use and dispose of the property. Although they can derive benefits from the thing, they cannot make use of such benefits. However, they do not lose their power to enter into legal transactions regarding assets owned by the religious in temporary vows. Thus, they will not lose the capacity to dispose of things. In addition, they will retain their capacity to acquire the right of ownership of other assets, either movable or immovable[10].

VI. The Right of Ownership Accruing to Religious Raised to the Episcopate

Property rights of religious raised to the episcopate are regulated by Canons 705 through 707 CCL and in particular Canon 706. Can. 706 CCL stipulates "- The religious mentioned above:

1. If he has lost the right of ownership of goods through profession, has the use, revenue, and administration of goods which accrue to him. a diocesan bishop and the others mentioned in can. 381, §2, however, acquire property on behalf of the particular church.; others, on behalf of the institute or the Holy See insofar as the institute is capable or not of possession;
2. If he has not lost the right of ownership of goods through profession, recovers the use, revenue, and administration of the goods which he had; those things which accrue to him afterwards he fully acquires for himself;
3. In either case, however, must dispose of goods according to the intention of the donors when they do not accrue to him personally".

The vows of poverty taken by a religious raised to the episcopate are considerably commuted. As noted by D. J. Andrés, this is due to the situation in which the bishop has found himself. Among other things, the strict rules are alleviated in connection with special dignity related to the bishop's rank[11].

Can. 706 CCL refers to Canon 668 § 4 CCL. Like in Canon 660, a division of the vows into solemn and simple ones can be noticed.

Can. 706 CCL. The religious who have renounced goods recover the use and administration of the goods they receive.

Yet, it should be highlighted that the religious promoted as bishop will not recover the right to acquire property on his own behalf. A diocesan bishop or one performing the function described in Can. 368 CCL acquires property for the benefit of his particular church. If, however, the religious who has lost the capacity to acquire and possess property through profession and does not perform the function described in Can. 368 CCL acquires goods for their religious institute unless that institute has no capacity to acquire the goods in which situation the religious acquires the goods for the Holy See.

In this case, the vow of poverty is modified by recovering the right to use and administer the goods a religious promoted to bishop receives. Therefore, no approval from a superior is required to administer and use the item. The sanction of invalidity does not apply to measures undertaken by the bishop either.

However, this does not affect individual acquisitions in any way; what the bishop acquires, he does not acquire for himself by only for entities mentioned in Canon 706 CCL. It should be emphasised that regarding the right to property, the entity for which the religious acquires the goods is of secondary significance. What is essential is that he does not acquire them for himself.

Note that the powers constituting the right of ownership refer only to goods he acquires after his promotion to bishop. On the other hand, a religious promoted to bishop does not recover the powers constituting the right of ownership of the goods he acquired before his promotion. These goods are governed by Can. 668 CCL.

[10] L. Sabbarese, Diritto canonico, Bologna 2015, p. 98;

[11] D. J. Andrés, Il diritto, p. 54

© 2023 Global Journals

The legal status of a religious who, in connection with his vow of poverty, was not deprived of the capacity to acquire and possess, hence retaining title to the property, also changes. In such circumstances, the religious promoted to bishop recovers the use, revenue and administration of the assets he owns. All the goods he will acquire, he will acquire for himself.

The situation of a religious promoted to bishop who renounced goods is analogous to that of a religious promoted to bishop who was not obliged to renounce them. In both cases, the ecclesiastical lawmaker alleviates the vow of poverty and bishops only recover their right of use and administration.

However, it is essential whether a religious, who was later promoted to bishop, had previously lost his right of ownership. The one who previously renounced goods is not capable of acquiring the goods as his property. He will only recover the administration of the goods. In contrast, for a religious who, in connection with his vow of poverty, did not lose his capacity to acquire and hold property, or own it, the loss of administration of the goods was the only limitation on their use. The poverty he vowed, in that case, made this use dependent on the decision of his superior, but whatever he acquired, he acquired for the religious institute. In this case, the ecclesiastical lawmaker restores him the capacity to acquire for himself (in his own name and on his own behalf), which, indeed, stays the operation of the rule "whatever a religious acquires (...), the religious acquires for the institute".

For a religious promoted to bishop, who made the vow of poverty, but after promotion to bishop did not lose his capacity to acquire and possess property and his right of ownership of previously possessed goods, poverty in the legal sense is fiction.

Can. 706 CCL makes the legal consequences dependent on his promotion to bishop. Some authors note that promotion to bishop is a provision consisting of three acts that are quite distant in time - designation, nomination and canonical possession[12]. The most significant of these three acts is the nomination, so this is the moment at which it should be deemed that the conditions for promotion to the episcopacy have been met.

VII. Conclusions

To sum up, the Code of Canon Law referring to the evangelical counsel of poverty quite significantly limits and even deprives the religious of the right of ownership accruing to natural persons. The basic division in Can. 668 CCL refers to the obligation to renounce goods of the norm of proper law of the religious institute so require. This means that not in every case does the vow of poverty involve renunciation of goods - such a requirement must expressly stem from the constitution of the institute.

The religious required to make the vow of property loses the right of ownership of assets they owned upon making the vow. The renunciation of goods results in the loss of the right of ownership but also of the capacity to acquire such goods in the future.

If a religious institute does not require renunciation of goods, the religious making perpetual vows of poverty are not deprived of the right of ownership, only the use of this right depends on the consent of their superior. They do not lose the capacity to acquire property on their own behalf either, but it should be remembered that “whatever a religious acquires (...), the religious acquires for the institute”.

The religious who have made temporary vows are not deprived of the right of ownership and the capacity to acquire property on their own behalf. They are only obliged to temporarily cede the administration of the goods to another person.

The perpetual vow of poverty is modified for the religious promoted to bishop as they recover the use, revenue and administration of the goods.

Regarding the religious who renounced goods, the vows of poverty are modified and alleviated and for the religious who were not required to renounce goods but the exercise of whose right of ownership was dependent on the consent of superiors, the modification related to the promotion to the episcopate was practically the alleviation of all burdens due to the vow of poverty.

[12] F. Bogdan, Prawo, p. 156 et seq.

© 2023 Global Journals

This page is intentionally left blank

© 2023 Global Journals

Global Journal of human-social science: a
Arts & Humanities - Psychology
Volume 23 Issue 3 Version 1.0 Year 2023
Type: Double Blind Peer Reviewed International Research Journal
Publisher: Global Journals
Online ISSN: 2249-460x & Print ISSN: 0975-587X

Research on Suzhou-Hangzhou Paradigm in Tang Poetry from the Perspective of Literary Cartography

By Yang Xunhua
Sichuan University

Abstract- Bai Juyi's poems in Suzhou and Hangzhou represented the turn of Bai Juyi's poetry creation from the outside to the inside. He expressed his daily life deeply in these poems. The research on Bai Juyi's poems and essays in Suzhou and Hangzhou has the following values. The research explored the historical origin and cultural deposits behind every poem of Bai Juyi in Suzhou and Hangzhou. From the perspective of time, the changes of ancient and modern poems reflected the historical changes. From the spatial dimension, the poem map reflected the distribution of relics. The research revealed the connotation and significance of various types of Bai Juyi's poems in Suzhou and Hangzhou. The research also revealed Bai Juyi's interactive writing style, regional connection and historical shuttle. Last but not least, we should sum up the paradigm of Suzhou and Hangzhou in Tang poetry.

Index Terms: *bai juyi, literary cartography, suzhou-hangzhou paradigm, tang poetry.*

GJHSS-A Classification: *FOR Code: 199999*

RESEARCHONSUZHOUHANGZHOUPARADIGMINTANGPOETRYFROMTHEPERSPECTIVEOFLITERARYCARTOGRAPHY

Strictly as per the compliance and regulations of:

Research | Diversity | Ethics

© 2023. Yang Xunhua. This research/review article is distributed under the terms of the Attribution-NonCommercial-NoDerivatives 4.0 International (CC BY-NC-ND 4.0). You must give appropriate credit to authors and reference this article if parts of the article are reproduced in any manner. Applicable licensing terms are at https://creativecommons.org/licenses/by-nc-nd/4.0/.

Research on Suzhou-Hangzhou Paradigm in Tang Poetry from the Perspective of Literary Cartography

Yang Xunhua

Abstract- Bai Juyi's poems in Suzhou and Hangzhou represented the turn of Bai Juyi's poetry creation from the outside to the inside. He expressed his daily life deeply in these poems. The research on Bai Juyi's poems and essays in Suzhou and Hangzhou has the following values. The research explored the historical origin and cultural deposits behind every poem of Bai Juyi in Suzhou and Hangzhou. From the perspective of time, the changes of ancient and modern poems reflected the historical changes. From the spatial dimension, the poem map reflected the distribution of relics. The research revealed the connotation and significance of various types of Bai Juyi's poems in Suzhou and Hangzhou. The research also revealed Bai Juyi's interactive writing style, regional connection and historical shuttle. Last but not least, we should sum up the paradigm of Suzhou and Hangzhou in Tang poetry.

Index Terms: bai juyi, literary cartography, suzhou-hangzhou paradigm, tang poetry.

I. Introduction

Literary Cartography is based on artificial intelligence. Maps of poets' movements in Tang and Song Dynasties and movements of Du Fu's poems had earned great popularity around the world in recent years. The group selected the names of places and historic sites in Bai Juyi's poems in Suzhou and Hangzhou, and made a detailed analysis of them. We supplemented ancient maps, modern maps, modern real maps, local landscape maps. The maps contained historical origin, cultural background, geographical location, religious color and other related information. The group circled the location one by one on the maps of Tang Changqing Baioli and modern Suzhou and Hangzhou. In addition, the group conjugated pictures into poem traces and added into the text. The participants are skillful in field investigation method.

The field investigation method reflected the preservation of the sites with videos and images of each poem. Overall, the results presented in two dimensions of time and space including the ancient appearance and modern appearance of poetry site. Eventually, the research formed a poem map combining text and geography.

The perspective of Literary Cartography is not only helpful in our research, but also plays an vital role in teaching Tang Poetry. The innovative teaching methods relies on digital technology. In contrast, traditional literature research methods only focuses on text reading and analysis. The students will study the Tang poetry when they see the huge historical change of poetry sites from various pictures, including the past and the present. The teachers and the students can stand near the historical sites by VR technology based on artificial intelligence. The poets created their masterpieces in the historical poetry sites in the virtual space. At the beginning of our teaching, the poets will appear in the virtual space. They create their masterpieces in the sight of students. The background of the virtual space will switch to the pictures matched with the poem. The ancient local Chronicles will appear on the screen in order to show the information of the previous location. In addition, modern appearance of poetry site also appear on the screen in order to take a brief look at the present situation. The students not only study the Tang poetry by the static text, but also travel in the previous and present space. Literary Cartography nest various previous and present pictures or videos together. The innovative teaching methods help students make a deep understanding of the poems. The innovative teaching methods also make the class more interactive and lively. It will avoid the disadvantages of boring and planarization in traditional teaching methods. The class will be the students-oriented, not the teachers-oriented. The innovative teaching methods by VR will encourage students' interest in Tang poetry. The innovative teaching methods perfectly match with the idea of the flipped classroom. As the Chinese Curriculum Standards for Ordinary Senior High Schools (2017 Edition revised in 2020) highlight the significance of improving students' thinking, 'The important stage of Chinese core literacy is thinking development and improvement'[1].

II. Review of Literature

Bai Juyi and his popular poetry style are the transition of the poetry history of the middle Tang Dynasty. His Suzhou and Hangzhou poems are typical of this popular poetry style. Bai Juyi's poems and essays in Suzhou and Hangzhou have no depression and helplessness. They contained almost all scenic spots and historic sites in Suzhou and Hangzhou. Many beautiful landscapes made readers read poems as if they were visiting Suzhou and Hangzhou. On the one hand, the poet expressed his love for landscape. On the other hand, his heart is the realistic expression of ideal life. Suzhou and Hangzhou are the centre of the interactive creation.

Author: Department of literature and Journalism, Sichuan University, China. e-mail: yxh925758575@126.com

© 2023 Global Journals

It also included Hangzhou, Yuezhou, Suzhou, Huzhou and Yangzhou. The participants are Yuan-zhen, Bai Juyi, Cui Xuanliang, Jiasu, Yin Yaofan, Zhou Yuanfan. The activities are huge and unprecedented in scale. It deepened the integration of Suzhou and Hangzhou. Poets of almost all dynasties chose the Suzhou-Hangzhou paradigm in their Landscape poetry. It reflected far-reaching influence. There are many unique poetry types in Su and Hang's creation. It is a mirror to Bai Juyi's daily life. Some poems even depicted his own portraits and gestures in life. The various types of poetry made everyday life more elaborate.

The previous research on Bai Juyi's poetry was confined to the regional culture of Suzhou and Hangzhou without summing up the paradigm of Suzhou and Hangzhou. The previous research only focused on the interpretation of text, not the landscape of the sites. Leisurely poetry cannot cover the various meaning of the Suzhou-Hangzhou paradigm. Leisurely poetry is not the significance and the value of the creation. Most of the present research has separated poetry from prose. We should pay more attention to the relationship between them. Owing to the sharing poems and repeated chanting, Suzhou-Hangzhou paradigm in Tang poetry gradually became a sort of canonization.

The disadvantages of previous traditional teaching methods research are boring and planarization. The students have no interest in studying Tang poetry.

At the forefront of literature research, a number of digital achievements has emerged in poetry geography that show the relationship between literature and geography more directly in recent years. These typical technology are based on artificial intelligence. Fig. 1 shows 'Chronological maps of Tang and Song literature'[2]. Fig. 2 shows 'Maps of The silk road poetry'[3]. Fig. 3 shows 'Geographical distribution of poets in the past dynasties'[4]. Fig. 4 shows 'Regional distribution of Tang and Song poets'[5].

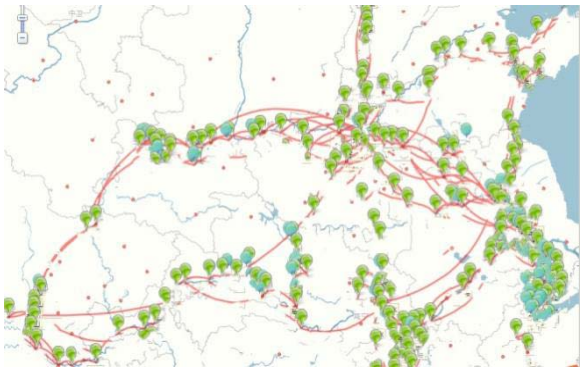

Fig. 1: Electronic map of Su Shi's movements (Chronological maps of Tang and Song literature[2])

At the forefront of educational research, 'Future Classroom' introduces artificial intelligence, VR technology, flipped classroom, classroom teaching, AI assistant, intelligent desk and other advanced technologies. The innovation technology made the original whiteboard projector classroom transform into a 'intelligent classroom'. Teachers and students interact with the poets by digital technologies.

In 'Future Classroom', Users can use virtual reality and artificial intelligence teaching assistants to change the future teaching equipment and classroom organization form. They use items such as Siri, Cortana, Alexa to find resources. They also collaborative learning with computer support by smart screens and smart desks [6].

There is a common problem in the current textbooks about Suzhou-Hangzhou poems. For example, a book named 'Jiangnan Poetry Style' separates these works into poems, lyrics and songs [7]. At first glance, it seems to have no legacy. However, it is easy to omit the regional cultural features of Suzhou and Hangzhou.

Although artificial intelligence research has reached fruitful achievements, it is a pity that few scholars combine literature with cartography.



Fig. 2: Maps of the silk road poetry [3].



Fig. 3: Geographical distribution of poets in the past dynasties [4].



Fig. 4: Regional distribution of tang and song poets [5].

© 2023 Global Journals

III. Methodology

The innovation of this paper lies in the combination of text and text, interspersed video and intelligent interaction. The research changed the tradition of emphasizing only text interpretation in general literary studies. The research made a comparison between Suzhou and Hangzhou by multimedia, such as PowerPoint, carries images and videos.

The readers can take a close look at the historical location combined with the poems. They will participant in activities of communication with the poets.

IV. Results and Discussion

Landscape poetry has reached a new height in the period of Bai Juyi since Wei, Jin, Southern and Northern dynasties. The previous research on Bai Juyi's poetry was confined to the regional culture of Suzhou and Hangzhou without summing up the paradigm of Suzhou and Hangzhou.

A poem is a paradigm of enacted intentionality [8]. Suzhou-Hangzhou Paradigm includes exquisite description of daily life, creation of classic cultural narrative space and strong sense of regional poetry interaction. All components of the paradigm were clearly demonstrated when the authors enjoyed the beautiful scenery and rich property. In addition, the author would like to transferring the perspective from the outer world to the inner emotions in Suzhou-Hangzhou Paradigm.

a) Characteristics of the Suzhou-Hangzhou Paradigm

The Suzhou-Hangzhou paradigm deeply described the authors' daily life. In addition to the essential feature, the paradigm also has four other characteristics.

The exquisite performance of daily life comes first. The description of daily life went deep into details. We should pay more attention to the narrative way of living notes. Bai Juyi emphasized the significance of subtle things in his daily life, such as one leaf or one stone. Besides, Bai Juyi also enjoyed sharing love and warm family life with readers. He often played hide-and-seek with his daughters and told interesting stories to them in the yard. Last but not least. Bai Juyi created the narrative mode of chanting while walking. The special narrative mode covered the whole track of Bai Juyi. We can easily follow him while taking a look of the beautiful scenery nearby.

Suzhou and Hangzhou were rich in property. Bai Juyi and the previous poets attached importance to describe the typical property, such as Taihu stone and Suzhou willow. The beauty of Suzhou and Hangzhou was presented to readers while the authors showed their passion for describing the typical property. Bai Juyi made his effort to creating a classic cultural narrative space, such as West Lake, BaiDam in Hangzhou, Huqiu Mountain, Shantang Street in Suzhou. These classic cultural narrative space gave rise to the generation of poets for thousands of years chanting. As geographical coordinates, the classic cultural space had also triggered a strong sense of historical shuttle. A space-time intertwined narrative picture of Suzhou and Hangzhou were created due to these special narrative space.

Bai Juyi and his best friend Yuan Zhen's chanting made strong sense of regional interaction. Yuan Zhen and BaiiJuyi's interaction in Hangzhou and Yuezhou was much larger than the scale of Tongzhou and Jiangzhou. Why did such unprecedented large-scale interaction in the history of Chinese literature occur in Suzhou and Hangzhou instead of any other places? This is a question worth exploring. From my point of view, reasons should be divided into two parts. One reason is the attraction of scenery. Bai Juyi was willing to dedicate so many poems to Suzhou and Hangzhou. He wrote 362 poems in nearly three years. They accounted for about 1/10 of the total number of his poems. Another reason is the demand for communication and interaction between Bai Juyi and his friends. The static art had made great progress in the period of Bai Juyi. Therefore, every poet spared his effort to make a breakthrough in dynamic art. Readers could transcend the limit of their own eyes and achieve the purpose of viewing all the scenery in Suzhou and Hangzhou through dynamic communication.

b) Value of Suzhou-Hangzhou Paradigm

Suzhou-Hangzhou paradigm brought a great value in the history of Chinese literature.

Bai Juyi summarized the experience of landscape poetry in the past dynasties and promoted the art to reach a new height. A large number of people had their own opinions in Shan Shui poems, and the skilled ones emerge endlessly, especially Wang Wei and Meng Haoran. It was not easy to surpass the predecessors. Despite these difficulties, Bai Juyi still succeeded in establishing his own style by writing classic works such as 'Spring Walk around Qiantang Lake', 'Spring view in Hangzhou' and 'the Gate of the Chang'. We should attribute the success to his refinement and promotion of the landscape poetry art before. In addition, Bai Juyi also made his achievement in the combination of landscape poetry and narrative space. The narrative space became classic due to the concentrated expression of landscape poetry.

Bai Juyi transferred the perspective from the outer world to the inner emotions. Through poems, the poets have tried to juxtapose the outer world with the deepest inner emotions [9] Suzhou-Hangzhou paradigm focused more on the writers' inward world. Poets paid more and more attention to themselves and even took their bodies as the object of description. A large number of poets decided to follow this internal point of view in

© 2023 Global Journals

the next several dynasties, which caused a profound impact. Poetry is a Symphony for the Soul. The poems are genuine works of creativity and the poets have written each poem deep from their hearts, making it a certainty that these poems will strike various chords in the heart of you, the Reader [10]. The regional interaction also triggered imitation. Wei Yingwu and Fang Furu created the Poetry-wine Paradigm, but it was only limited to a few people. Therefore, the paradigm had not earned its popularity around the country. Bai Juyi combined wine with music and dance, which caused permanent entertainments among the guests.

The classic narrative space overlapped the famous poets. Su Shi and other famous poets also left a large number of classical poems in the same narrative space created by Bai Juyi. Su Dam and BaiDam embraced each other. Bai Juyi and his followers pushed the classical paradigm finally finalized and matured.

Last but not least, we must emphasize the spread of Suzhou-Hangzhou impression and the establishment of Suzhou-Hangzhou classic status. Suzhou and Hangzhou had never gained so much popularity before Bai Juyi. Yuan Zhen and Bai Juyi are the leader of the poetry cire in Changqing and Baioli. Their poems were popular around the whole country. Many people copied the poems and even caused false transmission. Almost every literati would like to take Yuan Zhen and Bai Juyi's recommendation for pride. Yuan Zhen and Bai Juyi were excellent in self-promoting. They often edited books to collect their poems. Yuan Zhen and Bai Juyi achieved rapid transmission of Suzhou and Hangzhou around the country in Changqing and Baioli owing to these promotion. Moreover, Suzhou and Hangzhou are permanently peaceful and comfortable place instead of other places suffered with endless war. The 'Suzhou-Hangzhou Impression' set up a classic status through the circulation of poetry until now.

V. Conclusions

The Suzhou-Hangzhou paradigm deeply described the authors' daily life.

In addition to the essential feature, the paradigm also has four other characteristics. The exquisite performance of daily life comes first. Second, Suzhou and Hangzhou were rich in property. Bai Juyi and the previous poets attached importance to describe the typical property. Third, Bai Juyi made his effort to creating a classic cultural narrative space. Fourth, the Suzhou-Hangzhou paradigm represents a strong sense of regional interaction while chanting.

Suzhou-Hangzhou paradigm brought a great value in the history of Chinese literature. First, Bai Juyi summarized the experience of landscape poetry in the past dynasties and promoted the art to reach a new height. Second, Bai Juyi transferred the perspective from the outer world to the inner emotions. Through poems, the poets have tried to juxtapose the outer world with the deepest inner emotions. Suzhou-Hangzhou paradigm focused more on the writers' inward world. Third, Bai Juyi combined wine with music and dance, which caused permanent entertainments among the guests. Fourth, the classic narrative space overlapped the famous poets. Last but not least, we must emphasize the spread of Suzhou-Hangzhou impression and the establishment of Suzhou-Hangzhou classic status.

Yuan Zhen and Bai Juyi achieved rapid transmission of Suzhou and Hangzhou around the country in Changqing and Baoli owing to their promotion.

Moreover, Suzhou and Hangzhou are permanently peaceful and comfortable place instead of other places suffered with endless war. The 'Suzhou-Hangzhou Impression' set up a classic status through the circulation of poetry until now.

Conflict of Interest

The authors declare no conflict of interest.

Acknowledgment

Yang Xunhua Author thanks his wife for company and encouraging. YANG Xunhua Author also thanks his Postgraduate tutor for recommending the theory of Literary Cartography.

References Références Referencias

1. Chinese Curriculum Standards for Ordinary Senior High Schools (2017 Edition revised in 2020). CURRICULUM Standard Y5.1-2020.
2. Wang Zhaopeng, Chronological maps of Tang and Song literature. [Online]. Available: https://sou-yun.cn/PoetLifeMap.aspx.
3. Chinese Poetry Research Institute, The silk road poetry. [Online]. Available: https://sou-yun.cn/SilkRoad.html.
4. Sou-Yun, Geographical distribution of poets in the past dynasties. [Online]. Available: http://sou-yun.com/IndexByMap.aspx.
5. Sou-Yun, Regional distribution of tang and Song poets [Online]. Available: https://sou-yun.cn/Regional distribution of tang and Song poets.html.
6. British Education Weekly.(July 2017). AI assistant, VR technology, intelligent desk into the classroom, "future classroom" look like? [Online]. Available: https://www.jiemodui.com/N/82297.html.
7. Qi Zenghan, Jiangnan Poetry, 1st ed. Xi'an, China.: Xi'an Jiaotong University Press, ch. 1, pp.1-2.
8. Heward Wilkinson, The Muse as Therapist: A New Poetic Paradigm for Psychotherapy, New York: Routledge, 2018, pp. 195.

© 2023 Global Journals

9. Pratik Tibrewal and Devesh Golchha, Poetic Paradigm: Poetry Is a Symphony for the Soul. Bloomington: Partridge India, 2018, pp. 93.
10. Pratik Tibrewal and Devesh Golchha, Poetic Paradigm: Poetry Is a Symphony for the Soul. Bloomington: Partridge India, 2018, pp. 93.

© 2023 Global Journals

Global Journals Guidelines Handbook 2023

www.GlobalJournals.org

Memberships

Fellows/Associates of Social Science Research Council

FSSRC/ASSRC Memberships



Introduction

FSSRC/ASSRC is the most prestigious membership of Global Journals accredited by Open Association of Research Society, U.S.A (OARS). The credentials of Fellow and Associate designations signify that the researcher has gained the knowledge of the fundamental and high-level concepts, and is a subject matter expert, proficient in an expertise course covering the professional code of conduct, and follows recognized standards of practice. The credentials are designated only to the researchers, scientists, and professionals that have been selected by a rigorous process by our Editorial Board and Management Board.

Associates of FSSRC/ASSRC are scientists and researchers from around the world are working on projects/researches that have huge potentials. Members support Global Journals' mission to advance technology for humanity and the profession.

FSSRC

Fellow of Social Science Research Council

FELLOW OF SOCIAL SCIENCE RESEARCH COUNCIL is the most prestigious membership of Global Journals. It is an award and membership granted to individuals that the Open Association of Research Society judges to have made a 'substantial contribution to the improvement of computer science, technology, and electronics engineering.

The primary objective is to recognize the leaders in research and scientific fields of the current era with a global perspective and to create a channel between them and other researchers for better exposure and knowledge sharing. Members are most eminent scientists, engineers, and technologists from all across the world. Fellows are elected for life through a peer review process on the basis of excellence in the respective domain. There is no limit on the number of new nominations made in any year. Each year, the Open Association of Research Society elect up to 12 new Fellow Members.

Benefit

To the institution

Get letter of appreciation

Global Journals sends a letter of appreciation of author to the Dean or CEO of the University or Company of which author is a part, signed by editor in chief or chief author.



Exclusive Network

Get access to a closed network

A FSSRC member gets access to a closed network of Tier 1 researchers and scientists with direct communication channel through our website. Fellows can reach out to other members or researchers directly. They should also be open to reaching out by other.

Career | Credibility | Exclusive | Reputation



Certificate

Certificate, LOR and Laser-Momento

Fellows receive a printed copy of a certificate signed by our Chief Author that may be used for academic purposes and a personal recommendation letter to the dean of member's university.

Career | Credibility | Exclusive | Reputation



Designation

Get honored title of membership

Fellows can use the honored title of membership. The “FSSRC” is an honored title which is accorded to a person’s name viz. Dr. John E. Hall, Ph.D., FSSRC or William Walldroff, M.S., FSSRC.

Career | Credibility | Exclusive | Reputation

Recognition on the Platform

Better visibility and citation

All the Fellow members of FSSRC get a badge of "Leading Member of Global Journals" on the Research Community that distinguishes them from others. Additionally, the profile is also partially maintained by our team for better visibility and citation. All fellows get a dedicated page on the website with their biography.

Career | Credibility | Reputation

© Copyright by Global Journals | Guidelines Handbook

Future Work

Get discounts on the future publications

Fellows receive discounts on future publications with Global Journals up to 60%. Through our recommendation programs, members also receive discounts on publications made with OARS affiliated organizations.

Career | Financial



GJ Account

Unlimited forward of Emails

Fellows get secure and fast GJ work emails with unlimited forward of emails that they may use them as their primary email. For example,
john [AT] globaljournals [DOT] org.

Career | Credibility | Reputation



Premium Tools

Access to all the premium tools

To take future researches to the zenith, fellows receive access to all the premium tools that Global Journals have to offer along with the partnership with some of the best marketing leading tools out there.

Financial

Conferences & Events

Organize seminar/conference

Fellows are authorized to organize symposium/seminar/conference on behalf of Global Journal Incorporation (USA). They can also participate in the same organized by another institution as representative of Global Journal. In both the cases, it is mandatory for him to discuss with us and obtain our consent. Additionally, they get free research conferences (and others) alerts.

Career | Credibility | Financial

Early Invitations

Early invitations to all the symposiums, seminars, conferences

All fellows receive the early invitations to all the symposiums, seminars, conferences and webinars hosted by Global Journals in their subject.

Exclusive



Publishing Articles & Books

Earn 60% of sales proceeds

To take future researches to the zenith, fellows receive access to all the premium tools that Global Journals have to offer along with the partnership with some of the best marketing leading tools out there.

Exclusive | Financial

Reviewers

Get a remuneration of 15% of author fees

Fellow members are eligible to join as a paid peer reviewer at Global Journals Incorporation (USA) and can get a remuneration of 15% of author fees, taken from the author of a respective paper.

Financial

Access to Editorial Board

Become a member of the Editorial Board

Fellows may join as a member of the Editorial Board of Global Journals Incorporation (USA) after successful completion of three years as Fellow and as Peer Reviewer. Additionally, Fellows get a chance to nominate other members for Editorial Board.

Career | Credibility | Exclusive | Reputation

And Much More

Get access to scientific museums and observatories across the globe

All members get access to 5 selected scientific museums and observatories across the globe. All researches published with Global Journals will be kept under deep archival facilities across regions for future protections and disaster recovery. They get 10 GB free secure cloud access for storing research files.

© Copyright by Global Journals | Guidelines Handbook

ASSRC

ASSOCIATE OF SOCIAL SCIENCE RESEARCH COUNCIL

ASSOCIATE OF SOCIAL SCIENCE RESEARCH COUNCIL is the membership of Global Journals awarded to individuals that the Open Association of Research Society judges to have made a 'substantial contribution to the improvement of computer science, technology, and electronics engineering.

The primary objective is to recognize the leaders in research and scientific fields of the current era with a global perspective and to create a channel between them and other researchers for better exposure and knowledge sharing. Members are most eminent scientists, engineers, and technologists from all across the world. Associate membership can later be promoted to Fellow Membership. Associates are elected for life through a peer review process on the basis of excellence in the respective domain. There is no limit on the number of new nominations made in any year. Each year, the Open Association of Research Society elect up to 12 new Associate Members.

Benefit

To the institution

Get letter of appreciation

Global Journals sends a letter of appreciation of author to the Dean or CEO of the University or Company of which author is a part, signed by editor in chief or chief author.



Exclusive Network

Get access to a closed network

A ASSRC member gets access to a closed network of Tier 2 researchers and scientists with direct communication channel through our website. Associates can reach out to other members or researchers directly. They should also be open to reaching out by other.

Career | Credibility | Exclusive | Reputation



Certificate

Certificate, LoR and Laser-Momento

Associates receive a printed copy of a certificate signed by our Chief Author that may be used for academic purposes and a personal recommendation letter to the dean of member's university.

Career | Credibility | Exclusive | Reputation



Designation

Get honored title of membership

Associates can use the honored title of membership. The “ASSRC” is an honored title which is accorded to a person’s name viz. Dr. John E. Hall, Ph.D., ASSRC or William Walldroff, M.S., ASSRC.

Career | Credibility | Exclusive | Reputation

Recognition on the Platform

Better visibility and citation

All the Associate members of ASSRC get a badge of "Leading Member of Global Journals" on the Research Community that distinguishes them from others. Additionally, the profile is also partially maintained by our team for better visibility and citation.

Career | Credibility | Reputation

Future Work

Get discounts on the future publications

Associates receive discounts on future publications with Global Journals up to 30%. Through our recommendation programs, members also receive discounts on publications made with OARS affiliated organizations.

Career | Financial



GJ Account

Unlimited forward of Emails

Associates get secure and fast GJ work emails with 5GB forward of emails that they may use them as their primary email. For example, john [AT] globaljournals [DOT] org.

Career | Credibility | Reputation



Premium Tools

Access to all the premium tools

To take future researches to the zenith, fellows receive access to almost all the premium tools that Global Journals have to offer along with the partnership with some of the best marketing leading tools out there.

Financial

Conferences & Events

Organize seminar/conference

Associates are authorized to organize symposium/seminar/conference on behalf of Global Journal Incorporation (USA). They can also participate in the same organized by another institution as representative of Global Journal. In both the cases, it is mandatory for him to discuss with us and obtain our consent. Additionally, they get free research conferences (and others) alerts.

Career | Credibility | Financial

Early Invitations

Early invitations to all the symposiums, seminars, conferences

All associates receive the early invitations to all the symposiums, seminars, conferences and webinars hosted by Global Journals in their subject.

Exclusive



Publishing Articles & Books

Earn 60% of sales proceeds

Associates can publish articles (limited) without any fees. Also, they can earn up to 30-40% of sales proceeds from the sale of reference/review books/literature/publishing of research paper.

Exclusive | Financial

Reviewers

Get a remuneration of 15% of author fees

Associate members are eligible to join as a paid peer reviewer at Global Journals Incorporation (USA) and can get a remuneration of 15% of author fees, taken from the author of a respective paper.

Financial

And Much More

Get access to scientific museums and observatories across the globe

All members get access to 2 selected scientific museums and observatories across the globe. All researches published with Global Journals will be kept under deep archival facilities across regions for future protections and disaster recovery. They get 5 GB free secure cloud access for storing research files.

Associate	Fellow	Research Group	Basic
$4800 **lifetime designation**	$6800 **lifetime designation**	$12500.00 **organizational**	APC **per article**
Certificate, LoR and Momento **2** discounted publishing/year **Gradation** of Research **10** research contacts/day **1 GB** Cloud Storage **GJ** Community Access	**Certificate,** LoR and Momento **Unlimited** discounted publishing/year **Gradation** of Research **Unlimited** research contacts/day **5 GB** Cloud Storage **Online Presense** Assistance **GJ** Community Access	**Certificates,** LoRs and Momentos **Unlimited** free publishing/year **Gradation** of Research **Unlimited** research contacts/day **Unlimited** Cloud Storage **Online Presense** Assistance **GJ** Community Access	**GJ** Community Access

Preferred Author Guidelines

We accept the manuscript submissions in any standard (generic) format.

We typeset manuscripts using advanced typesetting tools like Adobe In Design, CorelDraw, TeXnicCenter, and TeXStudio. We usually recommend authors submit their research using any standard format they are comfortable with, and let Global Journals do the rest.

Alternatively, you can download our basic template from https://globaljournals.org/Template.zip

Authors should submit their complete paper/article, including text illustrations, graphics, conclusions, artwork, and tables. Authors who are not able to submit manuscript using the form above can email the manuscript department at submit@globaljournals.org or get in touch with chiefeditor@globaljournals.org if they wish to send the abstract before submission.

Before and during Submission

Authors must ensure the information provided during the submission of a paper is authentic. Please go through the following checklist before submitting:

1. Authors must go through the complete author guideline and understand and *agree to Global Journals' ethics and code of conduct,* along with author responsibilities.
2. Authors must accept the privacy policy, terms, and conditions of Global Journals.
3. Ensure corresponding author's email address and postal address are accurate and reachable.
4. Manuscript to be submitted must include keywords, an abstract, a paper title, co-author(s') names and details (email address, name, phone number, and institution), figures and illustrations in vector format including appropriate captions, tables, including titles and footnotes, a conclusion, results, acknowledgments and references.
5. Authors should submit paper in a ZIP archive if any supplementary files are required along with the paper.
6. Proper permissions must be acquired for the use of any copyrighted material.
7. Manuscript submitted *must not have been submitted or published elsewhere* and all authors must be aware of the submission.

Declaration of Conflicts of Interest

It is required for authors to declare all financial, institutional, and personal relationships with other individuals and organizations that could influence (bias) their research.

Policy on Plagiarism

Plagiarism is not acceptable in Global Journals submissions at all.

Plagiarized content will not be considered for publication. We reserve the right to inform authors' institutions about plagiarism detected either before or after publication. If plagiarism is identified, we will follow COPE guidelines:

Authors are solely responsible for all the plagiarism that is found. The author must not fabricate, falsify or plagiarize existing research data. The following, if copied, will be considered plagiarism:

- Words (language)
- Ideas
- Findings
- Writings
- Diagrams
- Graphs
- Illustrations
- Lectures

- Printed material
- Graphic representations
- Computer programs
- Electronic material
- Any other original work

Authorship Policies

Global Journals follows the definition of authorship set up by the Open Association of Research Society, USA. According to its guidelines, authorship criteria must be based on:

1. Substantial contributions to the conception and acquisition of data, analysis, and interpretation of findings.
2. Drafting the paper and revising it critically regarding important academic content.
3. Final approval of the version of the paper to be published.

Changes in Authorship

The corresponding author should mention the name and complete details of all co-authors during submission and in manuscript. We support addition, rearrangement, manipulation, and deletions in authors list till the early view publication of the journal. We expect that corresponding author will notify all co-authors of submission. We follow COPE guidelines for changes in authorship.

Copyright

During submission of the manuscript, the author is confirming an exclusive license agreement with Global Journals which gives Global Journals the authority to reproduce, reuse, and republish authors' research. We also believe in flexible copyright terms where copyright may remain with authors/employers/institutions as well. Contact your editor after acceptance to choose your copyright policy. You may follow this form for copyright transfers.

Appealing Decisions

Unless specified in the notification, the Editorial Board's decision on publication of the paper is final and cannot be appealed before making the major change in the manuscript.

Acknowledgments

Contributors to the research other than authors credited should be mentioned in Acknowledgments. The source of funding for the research can be included. Suppliers of resources may be mentioned along with their addresses.

Declaration of funding sources

Global Journals is in partnership with various universities, laboratories, and other institutions worldwide in the research domain. Authors are requested to disclose their source of funding during every stage of their research, such as making analysis, performing laboratory operations, computing data, and using institutional resources, from writing an article to its submission. This will also help authors to get reimbursements by requesting an open access publication letter from Global Journals and submitting to the respective funding source.

Preparing your Manuscript

Authors can submit papers and articles in an acceptable file format: MS Word (doc, docx), LaTeX (.tex, .zip or .rar including all of your files), Adobe PDF (.pdf), rich text format (.rtf), simple text document (.txt), Open Document Text (.odt), and Apple Pages (.pages). Our professional layout editors will format the entire paper according to our official guidelines. This is one of the highlights of publishing with Global Journals—authors should not be concerned about the formatting of their paper. Global Journals accepts articles and manuscripts in every major language, be it Spanish, Chinese, Japanese, Portuguese, Russian, French, German, Dutch, Italian, Greek, or any other national language, but the title, subtitle, and abstract should be in English. This will facilitate indexing and the pre-peer review process.

The following is the official style and template developed for publication of a research paper. Authors are not required to follow this style during the submission of the paper. It is just for reference purposes.

Manuscript Style Instruction (Optional)

- Microsoft Word Document Setting Instructions.
- Font type of all text should be Swis721 Lt BT.
- Page size: 8.27" x 11'", left margin: 0.65, right margin: 0.65, bottom margin: 0.75.
- Paper title should be in one column of font size 24.
- Author name in font size of 11 in one column.
- Abstract: font size 9 with the word "Abstract" in bold italics.
- Main text: font size 10 with two justified columns.
- Two columns with equal column width of 3.38 and spacing of 0.2.
- First character must be three lines drop-capped.
- The paragraph before spacing of 1 pt and after of 0 pt.
- Line spacing of 1 pt.
- Large images must be in one column.
- The names of first main headings (Heading 1) must be in Roman font, capital letters, and font size of 10.
- The names of second main headings (Heading 2) must not include numbers and must be in italics with a font size of 10.

Structure and Format of Manuscript

The recommended size of an original research paper is under 15,000 words and review papers under 7,000 words. Research articles should be less than 10,000 words. Research papers are usually longer than review papers. Review papers are reports of significant research (typically less than 7,000 words, including tables, figures, and references)

A research paper must include:

a) A title which should be relevant to the theme of the paper.
b) A summary, known as an abstract (less than 150 words), containing the major results and conclusions.
c) Up to 10 keywords that precisely identify the paper's subject, purpose, and focus.
d) An introduction, giving fundamental background objectives.
e) Resources and techniques with sufficient complete experimental details (wherever possible by reference) to permit repetition, sources of information must be given, and numerical methods must be specified by reference.
f) Results which should be presented concisely by well-designed tables and figures.
g) Suitable statistical data should also be given.
h) All data must have been gathered with attention to numerical detail in the planning stage.

Design has been recognized to be essential to experiments for a considerable time, and the editor has decided that any paper that appears not to have adequate numerical treatments of the data will be returned unrefereed.

i) Discussion should cover implications and consequences and not just recapitulate the results; conclusions should also be summarized.
j) There should be brief acknowledgments.
k) There ought to be references in the conventional format. Global Journals recommends APA format.

Authors should carefully consider the preparation of papers to ensure that they communicate effectively. Papers are much more likely to be accepted if they are carefully designed and laid out, contain few or no errors, are summarizing, and follow instructions. They will also be published with much fewer delays than those that require much technical and editorial correction.

The Editorial Board reserves the right to make literary corrections and suggestions to improve brevity.

Format Structure

It is necessary that authors take care in submitting a manuscript that is written in simple language and adheres to published guidelines.

All manuscripts submitted to Global Journals should include:

Title

The title page must carry an informative title that reflects the content, a running title (less than 45 characters together with spaces), names of the authors and co-authors, and the place(s) where the work was carried out.

Author details

The full postal address of any related author(s) must be specified.

Abstract

The abstract is the foundation of the research paper. It should be clear and concise and must contain the objective of the paper and inferences drawn. It is advised to not include big mathematical equations or complicated jargon.

Many researchers searching for information online will use search engines such as Google, Yahoo or others. By optimizing your paper for search engines, you will amplify the chance of someone finding it. In turn, this will make it more likely to be viewed and cited in further works. Global Journals has compiled these guidelines to facilitate you to maximize the web-friendliness of the most public part of your paper.

Keywords

A major lynchpin of research work for the writing of research papers is the keyword search, which one will employ to find both library and internet resources. Up to eleven keywords or very brief phrases have to be given to help data retrieval, mining, and indexing.

One must be persistent and creative in using keywords. An effective keyword search requires a strategy: planning of a list of possible keywords and phrases to try.

Choice of the main keywords is the first tool of writing a research paper. Research paper writing is an art. Keyword search should be as strategic as possible.

One should start brainstorming lists of potential keywords before even beginning searching. Think about the most important concepts related to research work. Ask, “What words would a source have to include to be truly valuable in a research paper?” Then consider synonyms for the important words.

It may take the discovery of only one important paper to steer in the right keyword direction because, in most databases, the keywords under which a research paper is abstracted are listed with the paper.

Numerical Methods

Numerical methods used should be transparent and, where appropriate, supported by references.

Abbreviations

Authors must list all the abbreviations used in the paper at the end of the paper or in a separate table before using them.

Formulas and equations

Authors are advised to submit any mathematical equation using either MathJax, KaTeX, or LaTeX, or in a very high-quality image.

Tables, Figures, and Figure Legends

Tables: Tables should be cautiously designed, uncrowned, and include only essential data. Each must have an Arabic number, e.g., Table 4, a self-explanatory caption, and be on a separate sheet. Authors must submit tables in an editable format and not as images. References to these tables (if any) must be mentioned accurately.

Figures

Figures are supposed to be submitted as separate files. Always include a citation in the text for each figure using Arabic numbers, e.g., Fig. 4. Artwork must be submitted online in vector electronic form or by emailing it.

Preparation of Eletronic Figures for Publication

Although low-quality images are sufficient for review purposes, print publication requires high-quality images to prevent the final product being blurred or fuzzy. Submit (possibly by e-mail) EPS (line art) or TIFF (halftone/ photographs) files only. MS PowerPoint and Word Graphics are unsuitable for printed pictures. Avoid using pixel-oriented software. Scans (TIFF only) should have a resolution of at least 350 dpi (halftone) or 700 to 1100 dpi (line drawings). Please give the data for figures in black and white or submit a Color Work Agreement form. EPS files must be saved with fonts embedded (and with a TIFF preview, if possible).

For scanned images, the scanning resolution at final image size ought to be as follows to ensure good reproduction: line art: >650 dpi; halftones (including gel photographs): >350 dpi; figures containing both halftone and line images: >650 dpi.

Color charges: Authors are advised to pay the full cost for the reproduction of their color artwork. Hence, please note that if there is color artwork in your manuscript when it is accepted for publication, we would require you to complete and return a Color Work Agreement form before your paper can be published. Also, you can email your editor to remove the color fee after acceptance of the paper.

Tips for writing a good quality Social Science Research Paper

Techniques for writing a good quality homan social science research paper:

1. Choosing the topic: In most cases, the topic is selected by the interests of the author, but it can also be suggested by the guides. You can have several topics, and then judge which you are most comfortable with. This may be done by asking several questions of yourself, like "Will I be able to carry out a search in this area? Will I find all necessary resources to accomplish the search? Will I be able to find all information in this field area?" If the answer to this type of question is "yes," then you ought to choose that topic. In most cases, you may have to conduct surveys and visit several places. Also, you might have to do a lot of work to find all the rises and falls of the various data on that subject. Sometimes, detailed information plays a vital role, instead of short information. Evaluators are human: The first thing to remember is that evaluators are also human beings. They are not only meant for rejecting a paper. They are here to evaluate your paper. So present your best aspect.

2. Think like evaluators: If you are in confusion or getting demotivated because your paper may not be accepted by the evaluators, then think, and try to evaluate your paper like an evaluator. Try to understand what an evaluator wants in your research paper, and you will automatically have your answer. Make blueprints of paper: The outline is the plan or framework that will help you to arrange your thoughts. It will make your paper logical. But remember that all points of your outline must be related to the topic you have chosen.

3. Ask your guides: If you are having any difficulty with your research, then do not hesitate to share your difficulty with your guide (if you have one). They will surely help you out and resolve your doubts. If you can't clarify what exactly you require for your work, then ask your supervisor to help you with an alternative. He or she might also provide you with a list of essential readings.

4. Use of computer is recommended: As you are doing research in the field of homan social science then this point is quite obvious. Use right software: Always use good quality software packages. If you are not capable of judging good software, then you can lose the quality of your paper unknowingly. There are various programs available to help you which you can get through the internet.

5. Use the internet for help: An excellent start for your paper is using Google. It is a wondrous search engine, where you can have your doubts resolved. You may also read some answers for the frequent question of how to write your research paper or find a model research paper. You can download books from the internet. If you have all the required books, place importance on reading, selecting, and analyzing the specified information. Then sketch out your research paper. Use big pictures: You may use encyclopedias like Wikipedia to get pictures with the best resolution. At Global Journals, you should strictly follow here.



6. Bookmarks are useful: When you read any book or magazine, you generally use bookmarks, right? It is a good habit which helps to not lose your continuity. You should always use bookmarks while searching on the internet also, which will make your search easier.

7. Revise what you wrote: When you write anything, always read it, summarize it, and then finalize it.

8. Make every effort: Make every effort to mention what you are going to write in your paper. That means always have a good start. Try to mention everything in the introduction—what is the need for a particular research paper. Polish your work with good writing skills and always give an evaluator what he wants. Make backups: When you are going to do any important thing like making a research paper, you should always have backup copies of it either on your computer or on paper. This protects you from losing any portion of your important data.

9. Produce good diagrams of your own: Always try to include good charts or diagrams in your paper to improve quality. Using several unnecessary diagrams will degrade the quality of your paper by creating a hodgepodge. So always try to include diagrams which were made by you to improve the readability of your paper. Use of direct quotes: When you do research relevant to literature, history, or current affairs, then use of quotes becomes essential, but if the study is relevant to science, use of quotes is not preferable.

10. Use proper verb tense: Use proper verb tenses in your paper. Use past tense to present those events that have happened. Use present tense to indicate events that are going on. Use future tense to indicate events that will happen in the future. Use of wrong tenses will confuse the evaluator. Avoid sentences that are incomplete.

11. Pick a good study spot: Always try to pick a spot for your research which is quiet. Not every spot is good for studying.

12. Know what you know: Always try to know what you know by making objectives, otherwise you will be confused and unable to achieve your target.

13. Use good grammar: Always use good grammar and words that will have a positive impact on the evaluator; use of good vocabulary does not mean using tough words which the evaluator has to find in a dictionary. Do not fragment sentences. Eliminate one-word sentences. Do not ever use a big word when a smaller one would suffice.

Verbs have to be in agreement with their subjects. In a research paper, do not start sentences with conjunctions or finish them with prepositions. When writing formally, it is advisable to never split an infinitive because someone will (wrongly) complain. Avoid clichés like a disease. Always shun irritating alliteration. Use language which is simple and straightforward. Put together a neat summary.

14. Arrangement of information: Each section of the main body should start with an opening sentence, and there should be a changeover at the end of the section. Give only valid and powerful arguments for your topic. You may also maintain your arguments with records.

15. Never start at the last minute: Always allow enough time for research work. Leaving everything to the last minute will degrade your paper and spoil your work.

16. Multitasking in research is not good: Doing several things at the same time is a bad habit in the case of research activity. Research is an area where everything has a particular time slot. Divide your research work into parts, and do a particular part in a particular time slot.

17. Never copy others' work: Never copy others' work and give it your name because if the evaluator has seen it anywhere, you will be in trouble. Take proper rest and food: No matter how many hours you spend on your research activity, if you are not taking care of your health, then all your efforts will have been in vain. For quality research, take proper rest and food.

18. Go to seminars: Attend seminars if the topic is relevant to your research area. Utilize all your resources.
Refresh your mind after intervals: Try to give your mind a rest by listening to soft music or sleeping in intervals. This will also improve your memory. Acquire colleagues: Always try to acquire colleagues. No matter how sharp you are, if you acquire colleagues, they can give you ideas which will be helpful to your research.

19. Think technically: Always think technically. If anything happens, search for its reasons, benefits, and demerits. Think and then print: When you go to print your paper, check that tables are not split, headings are not detached from their descriptions, and page sequence is maintained.

20. Adding unnecessary information: Do not add unnecessary information like "I have used MS Excel to draw graphs." Irrelevant and inappropriate material is superfluous. Foreign terminology and phrases are not apropos. One should never take a broad view. Analogy is like feathers on a snake. Use words properly, regardless of how others use them. Remove quotations. Puns are for kids, not grunt readers. Never oversimplify: When adding material to your research paper, never go for oversimplification; this will definitely irritate the evaluator. Be specific. Never use rhythmic redundancies. Contractions shouldn't be used in a research paper. Comparisons are as terrible as clichés. Give up ampersands, abbreviations, and so on. Remove commas that are not necessary. Parenthetical words should be between brackets or commas. Understatement is always the best way to put forward earth-shaking thoughts. Give a detailed literary review.

21. Report concluded results: Use concluded results. From raw data, filter the results, and then conclude your studies based on measurements and observations taken. An appropriate number of decimal places should be used. Parenthetical remarks are prohibited here. Proofread carefully at the final stage. At the end, give an outline to your arguments. Spot perspectives of further study of the subject. Justify your conclusion at the bottom sufficiently, which will probably include examples.

22. Upon conclusion: Once you have concluded your research, the next most important step is to present your findings. Presentation is extremely important as it is the definite medium though which your research is going to be in print for the rest of the crowd. Care should be taken to categorize your thoughts well and present them in a logical and neat manner. A good quality research paper format is essential because it serves to highlight your research paper and bring to light all necessary aspects of your research.

.

Informal Guidelines of Research Paper Writing

Key points to remember:

- Submit all work in its final form.
- Write your paper in the form which is presented in the guidelines using the template.
- Please note the criteria peer reviewers will use for grading the final paper.

Final points:

One purpose of organizing a research paper is to let people interpret your efforts selectively. The journal requires the following sections, submitted in the order listed, with each section starting on a new page:

The introduction: This will be compiled from reference matter and reflect the design processes or outline of basis that directed you to make a study. As you carry out the process of study, the method and process section will be constructed like that. The results segment will show related statistics in nearly sequential order and direct reviewers to similar intellectual paths throughout the data that you gathered to carry out your study.

The discussion section:

This will provide understanding of the data and projections as to the implications of the results. The use of good quality references throughout the paper will give the effort trustworthiness by representing an alertness to prior workings.

Writing a research paper is not an easy job, no matter how trouble-free the actual research or concept. Practice, excellent preparation, and controlled record-keeping are the only means to make straightforward progression.

General style:

Specific editorial column necessities for compliance of a manuscript will always take over from directions in these general guidelines.

To make a paper clear: Adhere to recommended page limits.



© Copyright by Global Journals | Guidelines Handbook

Mistakes to avoid:

- Insertion of a title at the foot of a page with subsequent text on the next page.
- Separating a table, chart, or figure—confine each to a single page.
- Submitting a manuscript with pages out of sequence.
- In every section of your document, use standard writing style, including articles ("a" and "the").
- Keep paying attention to the topic of the paper.
- Use paragraphs to split each significant point (excluding the abstract).
- Align the primary line of each section.
- Present your points in sound order.
- Use present tense to report well-accepted matters.
- Use past tense to describe specific results.
- Do not use familiar wording; don't address the reviewer directly. Don't use slang or superlatives.
- Avoid use of extra pictures—include only those figures essential to presenting results.

Title page:

Choose a revealing title. It should be short and include the name(s) and address(es) of all authors. It should not have acronyms or abbreviations or exceed two printed lines.

Abstract: This summary should be two hundred words or less. It should clearly and briefly explain the key findings reported in the manuscript and must have precise statistics. It should not have acronyms or abbreviations. It should be logical in itself. Do not cite references at this point.

An abstract is a brief, distinct paragraph summary of finished work or work in development. In a minute or less, a reviewer can be taught the foundation behind the study, common approaches to the problem, relevant results, and significant conclusions or new questions.

Write your summary when your paper is completed because how can you write the summary of anything which is not yet written? Wealth of terminology is very essential in abstract. Use comprehensive sentences, and do not sacrifice readability for brevity; you can maintain it succinctly by phrasing sentences so that they provide more than a lone rationale. The author can at this moment go straight to shortening the outcome. Sum up the study with the subsequent elements in any summary. Try to limit the initial two items to no more than one line each.

Reason for writing the article—theory, overall issue, purpose.

- Fundamental goal.
- To-the-point depiction of the research.
- Consequences, including definite statistics—if the consequences are quantitative in nature, account for this; results of any numerical analysis should be reported. Significant conclusions or questions that emerge from the research.

Approach:

- Single section and succinct.
- An outline of the job done is always written in past tense.
- Concentrate on shortening results—limit background information to a verdict or two.
- Exact spelling, clarity of sentences and phrases, and appropriate reporting of quantities (proper units, important statistics) are just as significant in an abstract as they are anywhere else.

Introduction:

The introduction should "introduce" the manuscript. The reviewer should be presented with sufficient background information to be capable of comprehending and calculating the purpose of your study without having to refer to other works. The basis for the study should be offered. Give the most important references, but avoid making a comprehensive appraisal of the topic. Describe the problem visibly. If the problem is not acknowledged in a logical, reasonable way, the reviewer will give no attention to your results. Speak in common terms about techniques used to explain the problem, if needed, but do not present any particulars about the protocols here.

The following approach can create a valuable beginning:

- Explain the value (significance) of the study.
- Defend the model—why did you employ this particular system or method? What is its compensation? Remark upon its appropriateness from an abstract point of view as well as pointing out sensible reasons for using it.
- Present a justification. State your particular theory(-ies) or aim(s), and describe the logic that led you to choose them.
- Briefly explain the study's tentative purpose and how it meets the declared objectives.

Approach:

Use past tense except for when referring to recognized facts. After all, the manuscript will be submitted after the entire job is done. Sort out your thoughts; manufacture one key point for every section. If you make the four points listed above, you will need at least four paragraphs. Present surrounding information only when it is necessary to support a situation. The reviewer does not desire to read everything you know about a topic. Shape the theory specifically—do not take a broad view.

As always, give awareness to spelling, simplicity, and correctness of sentences and phrases.

Procedures (methods and materials):

This part is supposed to be the easiest to carve if you have good skills. A soundly written procedures segment allows a capable scientist to replicate your results. Present precise information about your supplies. The suppliers and clarity of reagents can be helpful bits of information. Present methods in sequential order, but linked methodologies can be grouped as a segment. Be concise when relating the protocols. Attempt to give the least amount of information that would permit another capable scientist to replicate your outcome, but be cautious that vital information is integrated. The use of subheadings is suggested and ought to be synchronized with the results section.

When a technique is used that has been well-described in another section, mention the specific item describing the way, but draw the basic principle while stating the situation. The purpose is to show all particular resources and broad procedures so that another person may use some or all of the methods in one more study or referee the scientific value of your work. It is not to be a step-by-step report of the whole thing you did, nor is a methods section a set of orders.

Materials:

Materials may be reported in part of a section or else they may be recognized along with your measures.

Methods:

- Report the method and not the particulars of each process that engaged the same methodology.
- Describe the method entirely.
- To be succinct, present methods under headings dedicated to specific dealings or groups of measures.
- Simplify—detail how procedures were completed, not how they were performed on a particular day.
- If well-known procedures were used, account for the procedure by name, possibly with a reference, and that's all.

Approach:

It is embarrassing to use vigorous voice when documenting methods without using first person, which would focus the reviewer's interest on the researcher rather than the job. As a result, when writing up the methods, most authors use third person passive voice.

Use standard style in this and every other part of the paper—avoid familiar lists, and use full sentences.

What to keep away from:

- Resources and methods are not a set of information.
- Skip all descriptive information and surroundings—save it for the argument.
- Leave out information that is immaterial to a third party.



© Copyright by Global Journals | Guidelines Handbook

Results:

The principle of a results segment is to present and demonstrate your conclusion. Create this part as entirely objective details of the outcome, and save all understanding for the discussion.

The page length of this segment is set by the sum and types of data to be reported. Use statistics and tables, if suitable, to present consequences most efficiently.

You must clearly differentiate material which would usually be incorporated in a study editorial from any unprocessed data or additional appendix matter that would not be available. In fact, such matters should not be submitted at all except if requested by the instructor.

Content:

- Sum up your conclusions in text and demonstrate them, if suitable, with figures and tables.
- In the manuscript, explain each of your consequences, and point the reader to remarks that are most appropriate.
- Present a background, such as by describing the question that was addressed by creation of an exacting study.
- Explain results of control experiments and give remarks that are not accessible in a prescribed figure or table, if appropriate.
- Examine your data, then prepare the analyzed (transformed) data in the form of a figure (graph), table, or manuscript.

What to stay away from:

- Do not discuss or infer your outcome, report surrounding information, or try to explain anything.
- Do not include raw data or intermediate calculations in a research manuscript.
- Do not present similar data more than once.
- A manuscript should complement any figures or tables, not duplicate information.
- Never confuse figures with tables—there is a difference.

Approach:

As always, use past tense when you submit your results, and put the whole thing in a reasonable order.

Put figures and tables, appropriately numbered, in order at the end of the report.

If you desire, you may place your figures and tables properly within the text of your results section.

Figures and tables:

If you put figures and tables at the end of some details, make certain that they are visibly distinguished from any attached appendix materials, such as raw facts. Whatever the position, each table must be titled, numbered one after the other, and include a heading. All figures and tables must be divided from the text.

Discussion:

The discussion is expected to be the trickiest segment to write. A lot of papers submitted to the journal are discarded based on problems with the discussion. There is no rule for how long an argument should be.

Position your understanding of the outcome visibly to lead the reviewer through your conclusions, and then finish the paper with a summing up of the implications of the study. The purpose here is to offer an understanding of your results and support all of your conclusions, using facts from your research and generally accepted information, if suitable. The implication of results should be fully described.

Infer your data in the conversation in suitable depth. This means that when you clarify an observable fact, you must explain mechanisms that may account for the observation. If your results vary from your prospect, make clear why that may have happened. If your results agree, then explain the theory that the proof supported. It is never suitable to just state that the data approved the prospect, and let it drop at that. Make a decision as to whether each premise is supported or discarded or if you cannot make a conclusion with assurance. Do not just dismiss a study or part of a study as "uncertain."



Research papers are not acknowledged if the work is imperfect. Draw what conclusions you can based upon the results that you have, and take care of the study as a finished work.

- You may propose future guidelines, such as how an experiment might be personalized to accomplish a new idea.
- Give details of all of your remarks as much as possible, focusing on mechanisms.
- Make a decision as to whether the tentative design sufficiently addressed the theory and whether or not it was correctly restricted. Try to present substitute explanations if they are sensible alternatives.
- One piece of research will not counter an overall question, so maintain the large picture in mind. Where do you go next? The best studies unlock new avenues of study. What questions remain?
- Recommendations for detailed papers will offer supplementary suggestions.

Approach:

When you refer to information, differentiate data generated by your own studies from other available information. Present work done by specific persons (including you) in past tense.

Describe generally acknowledged facts and main beliefs in present tense.

The Administration Rules

Administration Rules to Be Strictly Followed before Submitting Your Research Paper to Global Journals Inc.

Please read the following rules and regulations carefully before submitting your research paper to Global Journals Inc. to avoid rejection.

Segment draft and final research paper: You have to strictly follow the template of a research paper, failing which your paper may get rejected. You are expected to write each part of the paper wholly on your own. The peer reviewers need to identify your own perspective of the concepts in your own terms. Please do not extract straight from any other source, and do not rephrase someone else's analysis. Do not allow anyone else to proofread your manuscript.

Written material: You may discuss this with your guides and key sources. Do not copy anyone else's paper, even if this is only imitation, otherwise it will be rejected on the grounds of plagiarism, which is illegal. Various methods to avoid plagiarism are strictly applied by us to every paper, and, if found guilty, you may be blacklisted, which could affect your career adversely. To guard yourself and others from possible illegal use, please do not permit anyone to use or even read your paper and file.

Criterion for Grading a Research Paper (Compilation) by Global Journals

Please note that following table is only a Grading of "Paper Compilation" and not on "Performed/Stated Research" whose grading solely depends on Individual Assigned Peer Reviewer and Editorial Board Member. These can be available only on request and after decision of Paper. This report will be the property of Global Journals

Topics	Grades		
	A-B	**C-D**	**E-F**
Abstract	Clear and concise with appropriate content, Correct format. 200 words or below	Unclear summary and no specific data, Incorrect form Above 200 words	No specific data with ambiguous information Above 250 words
Introduction	Containing all background details with clear goal and appropriate details, flow specification, no grammar and spelling mistake, well organized sentence and paragraph, reference cited	Unclear and confusing data, appropriate format, grammar and spelling errors with unorganized matter	Out of place depth and content, hazy format
Methods and Procedures	Clear and to the point with well arranged paragraph, precision and accuracy of facts and figures, well organized subheads	Difficult to comprehend with embarrassed text, too much explanation but completed	Incorrect and unorganized structure with hazy meaning
Result	Well organized, Clear and specific, Correct units with precision, correct data, well structuring of paragraph, no grammar and spelling mistake	Complete and embarrassed text, difficult to comprehend	Irregular format with wrong facts and figures
Discussion	Well organized, meaningful specification, sound conclusion, logical and concise explanation, highly structured paragraph reference cited	Wordy, unclear conclusion, spurious	Conclusion is not cited, unorganized, difficult to comprehend
References	Complete and correct format, well organized	Beside the point, Incomplete	Wrong format and structuring

INDEX

A

Adjuvant · 12
Affirmation · 9
Alleviated · 4, 5
Amenities · 4
Aristocracy · 8
Assertive · 6, 5

B

Belligerent · 4, 8
Brevity · 8

C

Catapulted · 2
Chastity · 1
Clergy · 1
Conjugated · 6

D

Deprived · 4, 5
Distinct · 5
Dynasties · 7, 8

F

Feudalism · 3, 8

G

Gathered · 1
Gigantic · 5, 10
Gradual · 4

I

Imagery · 5, 7
Immanent · 4, 10

M

Merely · 1

P

Passaistic · 8, 12
Perpetual · 1, 2, 3, 4, 5
Pervasive · 1
Prevalent · 3

R

Ramifications · 5
Reaffirmed · 2
Recruit · 7
Redundant · 5
Relapse · 6
Renounce · 1, 2, 3, 5, 12
Repercussions · 7, 8

S

Solace · 8
Stressors · 4

T

Turbulent · 6, 10



save our planet



Global Journal of Human Social Science

Visit us on the Web at www.GlobalJournals.org | www.SocialScienceResearch.org
or email us at helpdesk@globaljournals.org



ISSN 975587

© Global Journals