Online ISSN : 2249-460X
Print ISSN : 0975-587X
DOI : 10.17406/GJHSS

Global Journal

of Human Social Sciences: G

Linguistics & Education



Highlights

- Dimensions of Defamiliarization
- Educational Impact on Architecture
- Stress on Human Health & Wellness
- Analytical Review of Sorts Culture

Discovering Thoughts, Inventing Future

VOLUME 20 ISSUE 3 VERSION 1.0

© 2001-2020 by Global Journal of Human Social Sciences, USA

Volume 20 Issue 20 was originally issued as G3

Global Journal of Human-Social Science: G
Linguistics & Education

Global Journal of Human-Social Science: G
Linguistics & Education

Volume 20 Issue 3 (Ver. 1.0)

Open Association of Research Society

© Global Journal of Human Social Sciences. 2020.

All rights reserved.

This is a special issue published in version 1.0 of "Global Journal of Human Social Sciences." By Global Journals Inc.

All articles are open access articles distributed under "Global Journal of Human Social Sciences"

Reading License, which permits restricted use. Entire contents are copyright by of "Global Journal of Human Social Sciences" unless otherwise noted on specific articles.

No part of this publication may be reproduced or transmitted in any form or by any means, electronic or mechanical, including photocopy, recording, or any information storage and retrieval system, without written permission.

The opinions and statements made in this book are those of the authors concerned. Ultraculture has not verified and neither confirms nor denies any of the foregoing and no warranty or fitness is implied.

Engage with the contents herein at your own risk.

The use of this journal, and the terms and conditions for our providing information, is governed by our Disclaimer, Terms and Conditions and Privacy Policy given on our website http://globaljournals.us/terms-and-condition/menu-id-1463/

By referring / using / reading / any type of association / referencing this journal, this signifies and you acknowledge that you have read them and that you accept and will be bound by the terms thereof.

All information, journals, this journal, activities undertaken, materials, services and our website, terms and conditions, privacy policy, and this journal is subject to change anytime without any prior notice.

Incorporation No.: 0423089
License No.: 42125/022010/1186
Registration No.: 430374
Import-Export Code: 1109007027
Employer Identification Number (EIN):
USA Tax ID: 98-0673427

Global Journals Inc.

*(A Delaware USA Incorporation with "Good Standing"; **Reg. Number: 0423089**)*

Sponsors: Open Association of Research Society
Open Scientific Standards

Publisher's Headquarters office

Global Journals® Headquarters
945th Concord Streets,
Framingham Massachusetts Pin: 01701,
United States of America
USA Toll Free: +001-888-839-7392
USA Toll Free Fax: +001-888-839-7392

Offset Typesetting

Global Journals Incorporated
2nd, Lansdowne, Lansdowne Rd., Croydon-Surrey,
Pin: CR9 2ER, United Kingdom

Packaging & Continental Dispatching

Global Journals Pvt Ltd
E-3130 Sudama Nagar, Near Gopur Square,
Indore, M.P., Pin:452009, India

Find a correspondence nodal officer near you

To find nodal officer of your country, please email us at *local@globaljournals.org*

eContacts

Press Inquiries: *press@globaljournals.org*
Investor Inquiries: *investors@globaljournals.org*
Technical Support: *technology@globaljournals.org*
Media & Releases: *media@globaljournals.org*

Pricing (Excluding Air Parcel Charges):

Yearly Subscription (Personal & Institutional)
250 USD (B/W) & 350 USD (Color)

Editorial Board

Global Journal of Human-Social Science

Dr. Heying Jenny Zhan

B.A., M.A., Ph.D. Sociology, University of Kansas, USA Department of Sociology Georgia State University, United States

Dr. Prasad V Bidarkota

Ph.D., Department of Economics Florida International University United States

Dr. Alis Puteh

Ph.D. (Edu.Policy) UUM Sintok, Kedah, Malaysia M.Ed (Curr. & Inst.) University of Houston, United States

Dr. Bruce Cronin

B.A., M.A., Ph.D. in Political Science, Columbia University Professor, City College of New York, United States

Dr. Hamada Hassanein

Ph.D, MA in Linguistics, BA & Education in English, Department of English, Faculty of Education, Mansoura University, Mansoura, Egypt

Dr. Asuncin Lpez-Varela

BA, MA (Hons), Ph.D. (Hons) Facultad de Filolog?a. Universidad Complutense Madrid 29040 Madrid Spain

Dr. Faisal G. Khamis

Ph.D in Statistics, Faculty of Economics & Administrative Sciences / AL-Zaytoonah University of Jordan, Jordan

Dr. Adrian Armstrong

BSc Geography, LSE, 1970 Ph.D. Geography (Geomorphology) Kings College London 1980 Ordained Priest, Church of England 1988 Taunton, Somerset, United Kingdom

Dr. Gisela Steins

Ph.D. Psychology, University of Bielefeld, Germany Professor, General and Social Psychology, University of Duisburg-Essen, Germany

Dr. Stephen E. Haggerty

Ph.D. Geology & Geophysics, University of London Associate Professor University of Massachusetts, United States

Dr. Helmut Digel

Ph.D. University of Tbingen, Germany Honorary President of German Athletic Federation (DLV), Germany

Dr. Tanyawat Khampa

Ph.d in Candidate (Social Development), MA. in Social Development, BS. in Sociology and Anthropology, Naresuan University, Thailand

Dr. Gomez-Piqueras, Pedro

Ph.D in Sport Sciences, University Castilla La Mancha, Spain

Dr. Mohammed Nasser Al-Suqri

Ph.D., M.S., B.A in Library and Information Management, Sultan Qaboos University, Oman

Dr. Giaime Berti

Ph.D. School of Economics and Management University of Florence, Italy

Dr. Valerie Zawilski

Associate Professor, Ph.D., University of Toronto MA - Ontario Institute for Studies in Education, Canada

Dr. Edward C. Hoang

Ph.D., Department of Economics, University of Colorado United States

Dr. Intakhab Alam Khan

Ph.D. in Doctorate of Philosophy in Education, King Abdul Aziz University, Saudi Arabia

Dr. Kaneko Mamoru

Ph.D., Tokyo Institute of Technology Structural Engineering Faculty of Political Science and Economics, Waseda University, Tokyo, Japan

Dr. Joaquin Linne

Ph. D in Social Sciences, University of Buenos Aires, Argentina

Dr. Hugo Nami

Ph.D.in Anthropological Sciences, Universidad of Buenos Aires, Argentina, University of Buenos Aires, Argentina

Dr. Luisa dall'Acqua

Ph.D. in Sociology (Decisional Risk sector), Master MU2, College Teacher, in Philosophy (Italy), Edu-Research Group, Zrich/Lugano

Dr. Vesna Stankovic Pejnovic

Ph. D. Philosophy Zagreb, Croatia Rusveltova, Skopje Macedonia

Dr. Raymond K. H. Chan

Ph.D., Sociology, University of Essex, UK Associate Professor City University of Hong Kong, China

Dr. Tao Yang

Ohio State University M.S. Kansas State University B.E. Zhejiang University, China

Mr. Rahul Bhanubhai Chauhan

B.com., M.com., MBA, PhD (Pursuing), Assistant Professor, Parul Institute of Business Administration,
Parul University, Baroda, India

Dr. Rita Mano

Ph.D. Rand Corporation and University of California, Los Angeles, USA Dep. of Human Services, University of Haifa Israel

Dr. Cosimo Magazzino

Aggregate Professor, Roma Tre University Rome, 00145, Italy

Dr. S.R. Adlin Asha Johnson

Ph.D, M. Phil., M. A., B. A in English Literature, Bharathiar University, Coimbatore, India

Dr. Thierry Feuillet

Ph.D in Geomorphology, Master's Degree in Geomorphology, University of Nantes, France

Contents of the Issue

i. Copyright Notice
ii. Editorial Board Members
iii. Chief Author and Dean
iv. Contents of the Issue

1. Dimensions of Defamiliarization in Amit Chaudhuri's Afternoon Raag. *1-5*
2. Educational Impact on Architecture. *7-13*
3. L'influence Du Désir De Personnalisation De La Gestion De Carrières Sur La Fidélité Des Enseignants Vis-À-Vis De Leur Profession Au Cameroun. *15-34*

v. Fellows
vi. Auxiliary Memberships
vii. Preferred Author Guidelines
viii. Index

Volume 20 Issue 20
Originally issued as G3

Global Journal of human-social science: G
Linguistics & Education
Volume 20 Issue 3 Version 1.0 Year 2020
Type: Double Blind Peer Reviewed International Research Journal
Publisher: Global Journals
Online ISSN: 2249-460X & Print ISSN: 0975-587X

Dimensions of Defamiliarization in Amit Chaudhuri's Afternoon Raag

By Dr. Prarthana Vardhan

Dr. Shakuntala Misra National Rehabilitation University

Abstract- Amit Chaudhuri is a versatile writer and a recipient of various prestigious awards. Chaudhuri does not write about a great event, hero, heroics, or history in his works. Rather, he presents the familiar, quotidian reality of our daily, mundane life in a way that they become strange and interesting. He does this through the magic of his words. Chaudhuri perceives magic in the ordinary and considers it as an eternal thing. So, he is a realist who defamiliarizes the familiar through his poetic and charismatic language. The concept of defamiliarization emerged from Russian Formalism and proved more effective as a literary concept. Russian Formalists held the view that all literature is defamiliarized. Defamiliarization is basically a process, where, literary techniques and devices refresh our perceptions of the usual, commonplace things. In Amit Chaudhuri's novels, all such literary techniques and tropes have been employed that renews our perceptions of the ordinary, familiar things and defamiliarize it. This research paper will present how Chaudhuri has defamiliarized the familiar, in his novel, *Afternoon Raag*.

Keywords: *defamiliarization, strange, interesting, perception, refreshes literary tropes.*

GJHSS-G Classification: *FOR Code: 339999*



Strictly as per the compliance and regulations of:

© 2020. Dr. Prarthana Vardhan. This is a research/review paper, distributed under the terms of the Creative Commons Attribution-Noncommercial 3.0 Unported License http://creativecommons.org/licenses/by-nc/3.0/), permitting all non-commercial use, distribution, and reproduction in any medium, provided the original work is properly cited.

Dimensions of Defamiliarization in Amit Chaudhuri's Afternoon Raag

Dr. Prarthana Vardhan

Abstract- Amit Chaudhuri is a versatile writer and a recipient of various prestigious awards. Chaudhuri does not write about a great event, hero, heroics, or history in his works. Rather, he presents the familiar, quotidian reality of our daily, mundane life in a way that they become strange and interesting. He does this through the magic of his words. Chaudhuri perceives magic in the ordinary and considers it as an eternal thing. So, he is a realist who defamiliarizes the familiar through his poetic and charismatic language. The concept of defamiliarization emerged from Russian Formalism and proved more effective as a literary concept. Russian Formalists held the view that all literature is defamiliarized. Defamiliarization is basically a process, where, literary techniques and devices refresh our perceptions of the usual, commonplace things. In Amit Chaudhuri's novels, all such literary techniques and tropes have been employed that renews our perceptions of the ordinary, familiar things and defamiliarize it. This research paper will present how Chaudhuri has defamiliarized the familiar, in his novel, *Afternoon Raag.*

Keywords: defamiliarization, strange, interesting, perception, refreshes literary tropes.

I. Introduction

Amit Chaudhuri, born in 1962 in Calcutta, and brought up in Bombay, is one of the most celebrated and eminent writers of today. He is a successful novelist, keenly perceptive short story writer, a competent critic, a poet of distinction, and a wonderful classical singer. He has to his credit several novels, short stories, poetry, critical works, and reviews, etc. His very first novel, *A Strange and Sublime Address,* won the Betty Trask Award in 1991 and Commonwealth Writers' Prize for the first best book. His second novel, *Afternoon Raag* published in 1993, was the winner of the Southern Arts Literature Prize. His later novels such as *Freedom Song, A New World, The Immortals* brought to his credit awards like Los Angeles Times Book Prize, Sahitya Akademi Award, Rabindra Puraskar, Infosys Prize, etc. He was also elected a Fellow of the Royal Society of Literature in 2009. Presently he is a professor of Contemporary Literature at the University of East Anglia, England. Chaudhuri does not invent a great story or plot in his novels to capture the interest of the readers, rather; he does so by defamiliarizing the familiar. His novels amply illustrate how he defamiliarizes the familiar, poeticizes the ordinary, and make humdrum seem exciting.

The concept of 'ostranenie', which in translation has become known as defamiliarization, was introduced by Victor Shklovsky, a Russian formalist, in his essay, 'Art as Technique' in 1917. The Russian word 'ostranenie' literally means estrangement or to make things strange. The Russian Formalists were devoted to the study of experimental, avant-garde literature and art. Their primary concern was the 'literariness' of the text, or to put it in simple words, specifying those technical devices that distinguish literature from the ordinary language. Shklovsky made a point that in most activities, our perception becomes a habitual and an automatic process, where we are often unaware of, or take for granted our view of things and their relations. He further argued that we could never retain the freshness of our perception of things and activities because the process of our social and cultural life causes them to become 'naturalized' or 'automatized'. And therefore, it becomes the distinctive function of literature to give us back our awareness of things as if we see them for the very first time. It is the unique quality of the poetic or literary language to renew our perceptions and make us see things differently, in a new light, producing the effect of defamiliarization. To put it in the words of Harry Blamires, "Defamiliarization is the process by which art can refresh perceptions that are 'automatized' by daily habituation. Whenever an act or an object is described in such a way that our habitual notion of it is transformed, the process of defamiliarization is at work. It is operative too when the literary presentation is punctured by intrusions which destroy the illusion of reality" (358). Indeed the Russian Formalists held the opinion that all literature is defamiliarization. Shklovsky believed that defamiliarization could be found almost everywhere form is found. Defamiliarization is, therefore, all about those literary techniques and devices that make the familiar things seem unfamiliar. Chaudhuri employs all such literary techniques and devices that renews and refreshes our perceptions of the ordinary, familiar things and make them look strange and interesting. Defamiliarization is, therefore, about different perspectives, putting things on a cosmopolitan level, literary tropes such as irony, simile, metaphor, and various other techniques that tend to broaden our horizon of perception, renews our perception of the ordinary, commonplace things and make it look

Author: Assistant Professor, Department of English, Dr. Shakuntala Misra National Rehabilitation University (DSMNR University), Lucknow, U.P., India. e-mail: dr.prarthanavardhan@gmail.com

© 2020 Global Journals

delightful and fascinating. To sum up, Defamiliarization is about creating magic out of the ordinary through various literary tropes and techniques.

Afternoon Raag, eloquently praised by reviewers, is the second novel by Amit Chaudhuri. It is about the life of an Indian graduate student at Oxford who is shy, young and, romantic. Through his well-articulated, structured and rhythmic prose, the author tells us how the narrator feels at Oxford, how he reminisces about his parents, about his guru who gave him music lessons, about his homeland and how he interacts with his friends Mandira, Shehnaz and Mr. Sharma at Oxford. It is about the protagonist's perception, perspective and, emotional state at a place away from his homeland. Nothing much happens in the novel unless small, daily things are called happenings. The author has also vividly described the lanes and buildings, people, and places of Oxford and India as well. The novel does not deal with some great events or story; it is about the poetry of the commonplace. Chaudhuri crafts his sentences so beautifully and magically that even the daily happenings become a poetic experience. The novelist renews our perceptions by investing his work with beautiful imagery, metaphors, irony, analogies, and comparisons, using different perspectives, putting things on the cosmopolitan level, imparting aesthetic quality, creating unexpected situations, structures, etc. Though nothing much happens in the novel, yet, the readers are kept captivated by the sheer allure of his language.

Let us consider the very title of the novel, *Afternoon Raag*. In Indian Classical Music, there are different 'raags' (musical piece) that are supposed to be sung or performed at various intervals in a day and for different moods as well. Afternoon Raag is especially the raag for the afternoon period. Further, classical music is not only tremendously soothing and relaxing, but is of great help in curing various diseases and psychiatric disorders in human beings. 'Raag' in the title itself clearly shows the novelist's love for Indian Classical Music. 'Afternoon' is there in the title because the novelist himself is fond of the afternoon as the time of intermission, and in India, it is the period of rest. Regarding the title, the novelist says in 'Aalap: In Conversation with Amit Chaudhuri', "The original title was *Madhuvanti and the Afternoon Raag*. The publishers made me remove Madhuvanti because of all their problems with bookshops and booksellers not understanding in England a word like Madhuvanti"(177). Chaudhuri's inclination towards music is apparent in his works. There is no denying the fact that, of course, the novel is a beautiful piece of work in the field of literature that is so closely connected to music.

Imagery plays a vital role in bringing about the effect of defamiliarization as it renews the perception of the familiar. Chaudhuri considers the art of writing or the ability to write as the renovation of our perceptions of the physical world where we live. Chaudhuri's work is replete with beautiful images, and it reminds us of Wordsworth's images that are of arresting beauty. Though such images are too numerous to take note of individually, but, some of the more vivid and striking ones could not be passed without comment. For example, we all are familiar with the act of cutting our crescent-shaped nails and then throwing them. There is nothing unusual about it; it is a common act and a sight, but, in the novel the narrator has presented it differently by saying that his father, after clipping his nails "sneezes explosively, as he customarily does, sending the crescent-shaped nail-clippings flying into the universe" (22). Let us see in another example, how beautifully, with the magic of his words, the author defamiliarizes the playing of harmonium, a musical instrument, by his mother:

> Then my mother will settle on the rug and unclip the bellows, pulling and pushing them with a mild aquatic motion with her left hand, the fingers of the right hand flowering upon the keys, the wedding bangle suspended around her wrist. Each time the bellows are pushed, the round holes on the back open and close like eyes. (19).

It is thus apparent that through the charisma of his words and poetic language, the novelist creates pictures imparting a pictorial quality to his works and renews our perception of the usual, mundane things that we see around us in our daily life. We come across a lot of such defamiliarized, beautiful visual images in the novel.

Apart from visual imagery, the novelist has a fascination for sound and sound patterns. Indeed, the novelist possesses this unique gift of acute sense for sounds in great measures perhap due to his training as a classical musician. Music is an indispensable part of our lives and is found everywhere in nature, in humans, though we don't realize it as it becomes an automated process. It is the significant task of literature to make us aware and renew our perceptions of the familiar, ordinary, daily routine things of our lives. As there is a rhythm in our heart beat, therefore, the rhythm of music directly touches our hearts. When this rhythm of our heart beat is affected, our health is affected. Music is present in our expressions of celebrations, happiness, sadness, etc. Music could be said to be the sweet and soothing sounds that vibrate and create an immense aesthetic pleasure, feeling, and beauty that overcomes the sadness and sorrows of our lives. So music is recognized as one of the fine arts that brings permanent peace and solace to the human world. It is indeed man's expression of the deeper converse, with the innermost spirit, which is materialized through the medium of tones, tunes, and melodies. It can be said to be the language of man's deeper soul like literature. For example, the cries of a baby have certain rhythm,

© 2020 Global Journals

though, we are unaware of it because we become used to it. It is the talent of the artist that makes him observant and aware of such perceptions. The novel, *Afternoon Raag* is replete with sounds often musical and sometimes non-musical that has been rendered variously. Chaudhuri can register all kinds of sounds. He can even spiritualize the normal morning noises in the college. Let us see how he describes various sounds in the undergraduate college of Shehnaz:

> Noises were transmitted through walls and doors; a radio; a knowing, crowded murmur in the kitchen; footsteps in the corridor; the main door shutting; the firm but almost non physical sound of footsteps on the gravel; there were many lives in the building made transiently one by sound. (7).

In the works of Amit Chaudhuri, we come across the beautiful mingling of music and literature, probably, because the place where he belongs to is Bengal, which has always been a rich reservoir of these. Bengal has made an immense contribution in the field of Indian music, both classical and folk, and has tremendously contributed in the field of literature as well. This place also reminds us of our literary legend, Rabindra Nath Tagore whose commendable contributions in the above mentioned fields are our treasures. As the novelist, has developed close ties with India, particularly Bengal, and therefore, the novelist's love for Bengali culture, music, literature and language is apparent in his works.

Analogy and simile are the other two literary tropes that produce the effect of defamiliarization. In his works, Chaudhuri uses these tropes in his own inimitable way, which impart it a sense of beauty and strangeness. The novel abounds with such remarkable analogies and comparisons. To cite a few striking ones, early in the morning, narrator's mother "moves gently as a mouse"(15); the scar on his mother's skin is printed "like a radiant star"(16); when the narrator's mother sings, "breath tips in the swelling diaphragm as water does in a pitcher"(19). Further, the narrator says that in a club that was frequented mainly by company executives, general managers, and directors who were "Dressed alike in tie and white pin-striped shirt and dark suit, they looked to me like angels" (20). Narrator's friend, Sharma, out of his love for the English language, would use new idioms and words that he had picked up during the day, in every context, just "as a child who has been given a gift of new shoes spends a euphoric period wearing them everywhere" (32). To cite another example, let us see how the author defamiliarizes the well known act of students enthusiastically looking for their letters while staying in the hostel, far off from their homes:

> From about half past nine to ten, there was a hubbub as students stooped or stood on tip-toe to peep into Pigeon-holes, and sorted and sifted letters, and the mail-room had an air of optimism, of being in touch with the universe, found nowhere else in Oxford. When there were letters for me – the cheap, blue Indian aerogrammes from my mother – they lay there innocently like gifts from a Santa Claus, they did not seem material at all, but magical, like signs. (12).

Thus the author's imagination can land far and wide to bring in analogies like the above mentioned, where letters from one's native place are like gifts from Santa Claus. The author has beautifully captured the emotional state of the students living quite far away from their homeland. Chaudhuri has a distinctive talent for making the usual, familiar things seem unusual, unfamiliar, and fascinating. Nothing that can kindle the imagination of the writer can escape his senses, even the very minute things cannot escape from his observation and gets mentioned in his works. The author is capable of bringing in least expected analogies and comparisons that reminds us of the metaphysical poets. In another example, while on his visit to a South Indian cafe, he compares the "Tamil waiters who, dressed in an impeccable uniform, looked like the soldiers of an ancient army" (45).

Amit Chaudhuri is neither didactic nor has contempt for anything, but his disapproval towards certain things becomes apparent through his use of irony, satire, and humor, the other literary tropes that bring about the effect of defamiliarization. A few striking examples of such irony could be cited, for example, when the narrator and his friend, Sharma, were having a comfortable stroll in Oxford, the author says that they were "two Indians who might never have met in India, feeling at home…"(25). So, defamiliarization is produced when an author makes his readers perceive his work in a new light, removing the layer of automated perceptions. Such ironical touches are also a part of Chaudhuri's writings. Let us consider another example where the author puts forth his strong comments against people who seem to be devout Christians but can curse God at their own whims. He says, "There is a Church here, in Cowley, for they are devout Christians,…but blaspheming and cursing God when they feel like"(93). The author further puts it in the above context that these are the people who speak English that is hardly spoken in any other part of the world anymore, with "queer proverbs and turns, dropped consonants and vowels, and turn the language like meat inside their mouths"(93). He is conscious of the words, the accent, the language, be it English or Bengali. Thus language has always been a significant consideration for the novelist. A person speaking his mother tongue well but finding it inconvenient to command any fluency in a foreign language is something very natural and obvious. Since the novelist possesses a keen observation, so he has defamiliarized this familiar situation. Bengalis have a typical accent of putting stress on words, and they do

© 2020 Global Journals

this while speaking any language. The narrator amuses the readers by presenting the way his mother pronounces English words. The effect of defamiliarization becomes apparent when a Bengali person speaks English in a different accent. The narrator's remark regarding his mother's pronunciation of English becomes more gripping when he says that she belongs to a culture with a more spacious concept of time. The author puts it, "Like most Bengalis, she pronounces 'hurt' as 'heart', and 'ship' as 'sheep', for she belongs to a culture with a more spacious concept of time, which deliberately allows one to naively and clearly expand the vowels;…" (58).

The author's imagination recognizes no national frontiers, religion, caste, or culture; it can land anywhere, at any place or nation to bring in analogies, simile, metaphors, etc. to make his work more engrossing and captivating. Chaudhuri is an expert in defamiliarizing the familiar through his cosmopolitan attitude. To cite an example, the author's imagination in describing the Bengalis goes from Bengal to Ireland. The author puts it, "The Bengalis are like Irish families, except that they are small in height…" (115). Food is a vital metaphor in his works. Chaudhuri himself admits that he likes good food and can cook well. Let us consider an example, from the novel, where his food inclination has been presented with a cosmopolitan attitude. The author says, "I did know the St Giles' Cafe; it was the only place in Oxford that served a strong and dark coffee, with a scorched South Indian flavour…" (24). It is indeed amusing and entertaining to see in a restaurant when people take their orders, they are not addressed by their names; but, the food items. Let us see how the novelist puts it in the novel:

> When people were called to take their food from the counter, they were not addressed by their names, but by their orders – 'Ham and eggs!' 'Plate of chips!' 'Bacon Sandwitch!' – and without confusion, those who had been labelled so uniquely rose and walked towards the counter. (24).

Chaudhuri does not invent new names for the things he describes to creating something new, rather, he uses different perspectives to see things in a new light just as Leo Tolstoy had done in *Kholstomer*. It is evident that a child comprehends the world through his fancies and fantasies; this creates an unusual point of view, which by itself creates a stronger sense of novelty and strangeness that produces the effect of defamiliarization. The novel, as we know, is written in the first-person narrative. Now to cite an example, the narrator, as a child, lived in a flat of a tall building with his family. His mother's close friend, Chitrakaki, used to visit them in the afternoons, and together, these ladies, after spending quite some time at times, took small naps. There is nothing unusual in this scene; it is something familiar, but let us see how the perspective of a boy makes it interesting and unfamiliar: while asleep, "both of them suspended in a hundred feet above the earth without knowing it. Beneath them the Arabian Sea rushed and the earth moved, while their heads rested on a pillows so soft that they were like bodies of pure flesh without skeleton"(44). It is the perspective of the narrator as a student that leads him to perceive Mandira's tutor as "an old don in spectacles" (100).

For the novelist, life is the text and language, the source of renewing our perceptions of reality. Aestheticism also defamiliarizes the familiar. For Chaudhuri, aesthetics and emotions are significant. The author finds certain aestheticism in the Avadhi language, an old version of Hindi that is still spoken in the villages and so puts it that "Avadhi is such a poetic language that its most common expressions can bring places and spirits before the eye, can stir love in the heart"(106). Further, the author's fondness for the vernacular reminds us of his attachment with the local culture as well. For the author, who has his roots in Sylhet, East Bengal (now Bangladesh), received education in the elite institutions of Bombay, in University College, London, and Balliol College, Oxford, indeed possesses the ease of a native speaker in speaking and writing English. Even after spending considerable time abroad, the author has a deep attachment to the culture of his country, especially that of Bengal and its culture. He also feels indebted to writers in Indian languages, particularly in Bengali, for helping him mold his career of creative writing.

The novelist has developed close connections with Calcutta. Chaudhuri writes, Calcutta has both physical tangibility as well as specificity. This remarkable rendering of the physicality of space in his novels provides immense pleasure to the readers. Chaudhuri himself states that he feels "very uncomfortable with the idea of the nation"(Aalap,183). Chaudhuri admires those writers who locate their imagination in specific locations without bothering about the particularity of the nation. Chaudhuri considers Bibhutibhushan Bandyopadhyay's *Pather Panchali* to be an amazing modernist novel though it is just confined to a village, Nischindipur. Chaudhuri likes to be associated with modernism because it "has a great fascination for the real, for the physical world outside"(Aalap,162). Chaudhuri can not only render the local culture of India in a fascinating way but also the local culture of a place in a foreign country. Moreover, the streets are very dear to the author as he puts it, "street is not only a place which I use for people to go from one place to another. It's a place where a part of your life is lead. It substitutes as drawing-room, bedroom and other things" (Aalap, 179). And so, the author vividly renders various intimate spaces in Oxford, Calcutta (now Kolkata) and Bombay (now Mumbai).

Amit Chaudhuri is a great realist. In his works, he does not write about some great event or incident,

© 2020 Global Journals

hero or heroics, rather, he depicts just the small, ordinary details of everyday life of an individual like how he gets up in the morning, how he eats, takes a bath or drives an outdated, difficult-to-start car, and so on. To be precise, his creative focus falls on the humdrum, quotidian, familiar routine of life, but through the magic of his words and sublime language, he defamiliarizes the familiar, commonplace things of our life and makes it interesting by bringing the music and poetry from them. Well, it could be said that defamiliarization is all about the literary techniques and devices that are used to differentiate the literary language from the ordinary utterances apart from imparting an aesthetic quality to it. Therefore, we can say that Amit Chaudhuri's works have the beautiful effect of defamiliarization.

Works Cited

1. Chaudhuri, Amit. *Afternoon Raag*. London: Vintage, 1993.
2. Shukla, Sheobhushan & Shukla, Anu. *The Novels of Amit Chaudhuri: An Exploration in the Alternative Tradition (Ed.)* Delhi: Sarup & Sons, 2003.
3. ----------"Aalap: In Conversation with Amit Chaudhuri" by Suman R. Ghosh. *The Novels of Amit Chaudhuri: An Exploration in the Alternative Tradition (Ed.)* Sheobhushan Shukla and Anu Shukla, Delhi: Sarup & Sons, 2003.
4. Barry, Peter. *Beginning Theory: An* Introduction *to Literary and Cultural Theory*. Manchester: Manchester University Press, 1995.
5. Blamires, Harry. *A History of Literary Criticism.* London: Macmillam, 1991.
6. Shklovsky, Victor. "Art as Technique". *Modern Criticism and Theory (Ed)*. David Lodge. London: Longman, 1988.

© 2020 Global Journals

This page is intentionally left blank

© 2020 Global Journals

Global Journal of human-social science: G
Linguistics & Education
Volume 20 Issue 3 Version 1.0 Year 2020
Type: Double Blind Peer Reviewed International Research Journal
Publisher: Global Journals
Online ISSN: 2249-460X & Print ISSN: 0975-587X

Educational Impact on Architecture

By J. A. Olanusi

Joseph Ayo Babalola University

Abstract- It is a legitimate assertion that most major figures who have shaped the course of architecture can be described as "theoreticians who build." What distinguishes these architects from their architect colleagues of lesser status is the philosophical apparatus they have apprehended and made subject to their disposition. Aldo Rossi, Robert Venturi, Peter Eisenman, Jacques Herzog & Pierre De Meuron, Rem Koolhass, to name an incomplete list of important architects of the last forty years have been weaving philosophical and architectural thought with their built work. Curricula in most architecture schools establish the architectural studio as the largely unquestioned pillar in which architecture is coalesced by the student. There is a belief at work that suggests that the individual student design work is guided by inspiration as soon as s/he enters architecture school: The students sits at his or her desk and is waiting for a supernatural force to move their hands in such a manner that the sketch they produce will contain the germs of the next masterpiece.

Keywords: *academic architecture, concepts, design, education, philosophy students theory.*

GJHSS-G Classification: *FOR Code: 330199*



Strictly as per the compliance and regulations of:

© 2020. J. A. Olanusi. This is a research/review paper, distributed under the terms of the Creative Commons Attribution-Noncommercial 3.0 Unported License http://creativecommons.org/licenses/by-nc/3.0/), permitting all non-commercial use, distribution, and reproduction in any medium, provided the original work is properly cited.

Educational Impact on Architecture

J. A. Olanusi

Abstract- It is a legitimate assertion that most major figures who have shaped the course of architecture can be described as "theoreticians who build." What distinguishes these architects from their architect colleagues of lesser status is the philosophical apparatus they have apprehended and made subject to their disposition. Aldo Rossi, Robert Venturi, Peter Eisenman, Jacques Herzog & Pierre De Meuron, Rem Koolhass, to name an incomplete list of important architects of the last forty years have been weaving philosophical and architectural thought with their built work. Curricula in most architecture schools establish the architectural studio as the largely unquestioned pillar in which architecture is coalesced by the student. There is a belief at work that suggests that the individual student design work is guided by inspiration as soon as s/he enters architecture school: The students sits at his or her desk and is waiting for a supernatural force to move their hands in such a manner that the sketch they produce will contain the germs of the next masterpiece. This approach to architectural education is subject to the assumption that the students are geniuses. Architecture education should not be based on inspiration only but on a rational discourse with the major concepts that make architecture. This paper therefore advocates that Architecture students have to encounter a discourse with the major concepts of architecture not in their graduate studies but in the beginning year of their architectural education. This is because without that basic knowledge of architectural philosophy, appreciation and understanding of architecture may be delayed and the supposed architect might be beclouded in professional practice.

Keywords: academic architecture, concepts, design, education, philosophy students theory.

I. Introduction

Alberti directly and explicitly criticized Vitruvius's broad educational scheme and developed a radically and self-consciously delimited professionalized field of study for architectural education. These differences are reflected in their theories on architecture. For Vitruvius, architecture was a process of signification consisting of taxis (order), diathesis (arrangement), and oeconomia (eurythmy, symmetry, propriety and economy). He distinguished between the actual work (practice) and the theory of it.

There were three departments of architecture: building (public and private), dialing and mechanics. These were set within the triad of firmness, commodity and beauty. For Alberti, architecture or the art of building beautifully consisted of lineaments (design) and structure a (construction). Alberti allowed for both an independent and dependent relationship between these two ideas, thereby forming a duality of mind and body in the building. The building itself divides into six elements: locality, area, compartition, wall, roof and opening. The idea of ornament plays a significant role for Alberti. Ornament was not simply the application of decoration onto a form. A building in its entirety was understood to be an ornament of the city, with duration and beauty.

Therefore in rejecting theory we may have given away aspirations towards the universal, and thus diminished the possibility of establishing a telos for architectural education. Heidegger. (1987) posit that the modern understanding of "theory is a constructive assumption for the purpose of integrating a fact into a larger context without contradiction". He adds that theory in the ancient sense is "an essential determination of nature".

II. Aim of the Study

The aim is to erect intellectual scaffolding for knowledge in architecture and have available apparatus to respond to what architecture is from the outset of the student's architectural studies.

III. Objective of the Study

1. The objective is to reveal the three basic fields of architectural education: basic design, theory and architectural design studio.
2. To reevaluate architecture education by suggesting new input into architecture in view of the global challenges in the built environment by theoretical reflections, writings, and manifestos, treatises in the disciplines of philosophy, art, and architecture.

IV. Scope of the Study

The scope covers the basic philosophical rudiments of architectural design involving the historical to the modern pedagogy and its overall impact on education through the copious use of library research apparatus.

V. Statement of Research Problem

Much effort has not been made for the student to explore work of theoretical reflections, writings, and manifestos, treatises in the disciplines of philosophy, art, and architecture which ought to be necessary tools to equip the student ahead of changing global challenges.

VI. Research Question

Can architectural design have a function that emphasizes philosophical origin, values and differences' aid holistic architecture-theoretical understanding?

Author: Department of Architecture, Joseph Ayo Babalola University, Ikeji-Arakeji, Nigeria. e-mail: olarccreation@yahoo.com

© 2020 Global Journals

VII. Justification for the Study

Very few schools in the English-speaking world produce scholarly works on the scale that would be considered normal for other university-based disciplines. Bedford and Groák determined that less than half of British architectural academics were involved in research, and the proportion is probably about the same for the United States. Much more study of the built environment is done outside the schools than inside, in government research centres and private industry. The research that is conducted in the schools is fragmented and takes place more within particular sub-disciplines (environment- behaviour studies as a branch of the social sciences, lighting research as a branch of physics, engineering or physiology) than the architectural milieu-so much so that some have wondered aloud whether there is such a thing as architectural research. open warfare that exists between the supernumerary scientific (or scientistic) researchers and those who are getting on with the job of teaching future architects. The only area which is unequivocally a legitimate subject for architectural cerebration is history, theory and criticism

VIII. Research Focus

The essentiality of philosophy and theory as the academic tool for the expansion of architectural frontier.

IX. Literature Review (Architecture & Philosophy: Publishing the Concepts)

Who can imagine the Vanna Venturi House in Chesnutt Hill, Pennsylvania built in 1962 by Robert Venturi or the San Cataldo Cemetery in Modena built in the mid-1970s by Aldo Rossi without their respective landmark treatises "Complexity and Contradiction" and "Architettura della Citta", both published 1966? While it does not seem to matter whether the built structure or the written manifest appeared first, we can assert that idea and object are two sides of the same coin. In other words, good architects are in full intellectual command of what they are designing and what they are distilling in writing or in speech.

It would be too much of a generalization to claim that the best architects of each generation –those few architects of every generation who are able to capture the world by means of buildings in such a distinct and powerful manner that the spaces and shapes of these buildings cause repercussions in the souls of men and women of that generation– also happen to be the best educated architects. Architecture and architects cannot make such a claim because it is obvious that intellectual capacity and encyclopedic knowledge cannot conveniently be multiplied for the making of an architect who subsequently can stir the imagination of people.

Having issued this disclaimer, the argument of this presentation points to the problem that this disclaimer just stated above, namely that there exists a hardly describable spectrum of "ingredients" that make for a good architect, has unduly "muddied the waters" in the sense that there now exists a deep distrust towards the necessary intellectual capacity of an architect. Voices in architectural education are shouting of an "intellectualization" of the architect's education. On one hand this distrust against an "intellectualization" in architectural education can be supported. There exists a swathe of approaches towards architecture through extra-architectural means. For example, studying the architectural theories of the past forty years demonstrate a proclivity to argue models of approach to architecture in close proximity to linguistic formulations. Its key characteristic is the translation of one form of expression into another one, and the one major criterion for a renewal of any kind of meaning is the ability to express it in explicit linguistic terms. Architecture, though, is in its essence a syntactic totality of forms and spaces.

a) The Painters Reflection

In "Eye and Mind," Merleau-Ponty (1993) criticizes traditional western philosophy's idea of art as representation or index, a linguistic icon that calls to mind an idea of the represented thing This formulation of art ascribes creative power only to the mind. He proposes instead an idea of painting as carnal echo, a formulation that locates this generative power in the active relationship between human beings and the surrounding world. In this formulation, a painter opens himself or herself up to the world through vision. Through the channel of vision, the world enters the painter, inhabits the painter's interior, and mixes with the painter's carnality – his or her embodied consciousness. In mixing with the painter until it is no longer clear which is the painter and which is the world, the things of the world achieve a sort of doubling, existing simultaneously in the world and "at the heart of vision." The resultant mixture of painter and world is then expressed, literally pushed out, back into the world as a physical artifact, a painting. This is supported by the theory of Empiricism which is a theory of knowledge that asserts that knowledge comes only or primarily from sensory experience. One of several views of epistemology is the study of human knowledge, along with rationalism, The architect's way of experiencing the world reveals connections or likenesses between things not readily apprehended by a mere observer, as when an abrupt turn in a stair recalls or suggests the qualities of a mountain path or a circuitous alley.

© 2020 Global Journals

b) *Architectural Education: An Overview of Past and Present*

Architecture is one of the oldest professions: it dates back to the third millennium BC. The education of architects has for many centuries taken the form of apprenticeship, but in the last century it evolved into a 'studio-based tutorial environment' (Glasser, 2000). This change in professional training is mostly explained by the centralization of education and the development of modern methods and media. For example, the emergence of photography, video and the internet has made travel less essential in the education of a young architect (Lawson, 2001). Education has turned passive: learning is mostly theoretical such as history land survey building construction and in-studio.

"The basic assumption of passive professional education is that language can express reality adequately enough to motivate and guide practice" (Hoberman and Mailick, 1994).This statement is valid for current professional education in general: education that is disconnected from the profession. This type of education may work better in some disciplines than in others. In the case of architecture, language and even visual media are not enough to convey to students the concepts of space that are indispensable to developing the ability to design environments. It is fair to say, therefore, that "architecture as a purely musical composition of shapes and colors in light is an elusive ideal" (Baljon, 2002). Architecture has always relied on knowledge of precedents in building types and arrangement of spaces within the environment. In the information age, however, this knowledge has become omnipresent, yet anonymous. Today, students rarely have first-hand experience of these precedents; rather, their experience is disseminated through images in magazines, journals, books, the internet and television (Lawson, 2001). One of the key objectives of an architectural education is to expose students to a "veritable barrage" of experience that they can draw upon when they design (Lawson, 2001, Downing 2000). In current education, such a "barrage" is visually biased. In the era of information technology and virtual reality – with the dominance of visual representation as the end product of architecture – what we actually do (often unintentionally) is limit ourselves to image-to-image transformation. If architectural education could have one clear goal it should be to educate and sustain the next generation of talent to have a sympathetic awareness of its origins.

X. The Critique of Architectural Education

Neither American nor British practitioners have ever been reticent about criticising the schools, the fundamental, nor are continuing failure of which, from their point of view, their sheer and seemingly perverse inability to prepare students for the real world of practice. The studio system of education is, they say, a fantasy world in which incompetent professors who are the centre of petty personality cults encourage bizarrely unrealistic expectations in students, while avoiding the teaching of anything actually to do with the hard realities of life. Students learn nothing of the other members of the construction industry. They cannot draw and they know nothing of construction. The suggested remedies are usually along the lines of introducing more 'pragmatic' subjects such as management and technical courses or, significantly, a partial return to apprenticeship in some form.

There certainly is no problem in finding evidence that architecture is failing to perform like other academic disciplines, whose function is invariably taken to be knowledge-production. If architecture were as research-oriented as the average university discipline it would graduate almost ten times as many doctoral students each year as it actually does. Even home economics, not usually regarded as the most intellectual of areas, produces more. Over the entire period 1920 to 1974 American universities graduated only 56 people with a doctorate in architecture, a minuscule figure. Perhaps one quarter of American academics in architecture schools hold a PhD, a degree which in other fields is mandatory for even the lowest ranks. Architectural academics do little research; neither they nor the profession find it relevant. Indeed, there is often a positive hostility to the very idea of this most intellectual and academic of activities, for, of course, designing buildings, not publishing papers; increments the architectural academic's symbolic capital.

XI. Research Methodology

The method adopted in this research work is based on Several existing text books, periodicals, journals, internet search engine i.e. e -libraries, were consulted for this study.

XII. Conceptual Frame Work

a) *Teaching the Basic Philosophy at the beginning Year of Architectural Education*

Architecture education should attempt to balance of how it weighs inspiration and how it weighs knowledge that is subject to a rational discourse with the major concepts that make architecture. Architecture students ought to encounter a discourse with the major concepts of architecture not only –if at all– in their graduate studies but in the beginning year of their architectural education because without that basic knowledge of architectural concepts any more thorough understanding of architecture is not possible. Why would one wait to learn the intellectual basis of architecture until graduate school as the curricula of many architecture schools prescribes?

© 2020 Global Journals

One example that quite convincingly demonstrates the necessity to be familiar with a conceptual architectural framework is the Goetz Gallery built by Jacques Herzog & Pierre de Meuron in Munich in 1992. Other examples could display the same point that is intent to be demonstrated with this example, namely, the specificity of architectural concepts and how they are used in architecture. This example is not only depicting the necessity to understand concepts but it also focuses on the shifting nature of these concepts over time.

b) Inquiry into the Function of Education in this Context

Given that the function of the design process is to provide a service to human beings, it must be defined as a type of social activity. The education and design process should make the professionals and prospective professionals aware of and sensitive to this fact. In other words, the education of architects should ensure that the prospective architects acquire a basic professional philosophy.

As different education programmes have many branches, defined by different knowledge fields, there cannot be a simple formula for incorporating them into the curriculum. However, one strategy for structuring education may take the form of co-ordinating disciplines that form the 'backbone' of architectural education, its fundamental tenets. The need for such planning is sorely felt in the contemporary education system. characteristics, the education may be perceived as a kind of intersection of society, and may be planned:

i. As an instrument of communication between the profession and society,
ii. As a means of sustaining cultural values,
iii. To make the user an active participant in designing and changing the environment,
iv. To further advance the integration between different disciplines and scientific fields. With such an approach, the practice, education and theoretical scope of architecture would gain new dimensions and content.

c) The Changing Architect

Design is a complex activity, as it encompasses a wide field of knowledge, a wide range of disciplines, and the interaction between these disciplines. Even though different design objects have different characteristics and priorities, architectural/urban design is a field in which technique intertwines with social dimensions. This is due to the fact that while the object of design is space, its subject is the human being. In such a setting, the following questions come to the fore:

i. How can the environmental sensitivity of the prospective architect be developed using Information technologies?
ii. How can the architect act together with society in the face of the erosion of cultural and aesthetic values?
iii. What is the role of the architect in a world driven towards uniformity, and how can the Architect use information technologies to foster cultural plurality?

d) Proposed methods in architectural education

i. *Basic Design*

The basic design education, which is planned as an important studio training/discipline in order to trigger creativity in architectural education, has a great importance in developing the students' mindsets.

Basic design teaches not only the representation of a project purely in terms of its geometric features and/or drawings, but also its cultural, historical, theoretical and sociological background. This is *Structuralism* which is a theoretical paradigm that emphasizes that elements of culture must be understood in terms of their relationship.

Therefore, it should be perceived not only as a foundational discipline taught in the formative years of tuition at professional training institutions, but also as a method of education designed to develop sensitivity to visual and relational elements. In essence, the theory of basic design aims to develop individuals who are sensitive to the environment and capable of designing and transforming the world on the basis of this sensitivity.

ii. *Theory*

In the existing education programmes, theoretical teaching is generally linked with form. However, as touched upon above, architecture is also a field of social planning. Social knowledge is an inseparable part of the transformational process of architectural design. Therefore, in education, it is vital to assign an important role to the measures developed by the theories of social sciences for processes of spatial transformation.

Adopting such an understanding in the education programmes primarily requires including the social disciplines in the programme. Such an initiative may be seen as a preparatory grounding for prospective architects. These subjects should be taught in such a way that students are able to relate them to architecture and space. Experts in the social disciplines may be able to shed light on the relationship between their profession and spatial design, and open new paths of thought in order to support the formation of prospective architects.

iii. *Architectural Design Studios*

In architectural education, the place where the above-mentioned disciplines are transformed into a synthesis is the architectural design studio. Thus we may say that the architectural studios form the "backbone" of architectural education. When different

© 2020 Global Journals

subjects are included in the curriculum within the scope of the aims outlined above, the students can be given the opportunity to explore the different dimensions of the design process.

Here we may cite the process of preparing the city conservation plan for Bologna, Italy, in order to emphasise that spatial and environmental transformation is also a part of social and cultural planning. The method employed by the planner, Cervallati, to foster an understanding among the people of Bologna of their historical and cultural inheritance, may be seen as an example of social planning and development that goes beyond an architectural project. Cervelatti designed an exhibition in the historical town square that displayed the old city, and invited the people on a journey through the collective history and memory of the city. Because the main theme was the conservation and transformation of the city, the notion that historical and social values are an indivisible part of architectural space was stressed.

XIII. Recommendation for New Design Criteria

For architects, developing new criteria for the design process and examining the existing education system require a redefinition of certain concepts. These may be summarised as follow, in the context of the above-mentioned approaches:

i. New interpretation of creativity (what is creativity? How and in which fields could it be developed?).
ii. New demarcations of the fields of knowledge (redefining the fields of knowledge in line with the changing circumstances of contemporary society. How could additions, subtractionsor changes be implemented?).
iii. The concept of architecture integrated with social sciences (what are the methods for integrating architecture with social sciences?).
iv. The richness of the theoretical base (integral approach to multidimensional environment).
v. Knowledge of education in practice (methods for communicating).
vi. Probing the cause-effect relationship in design (intellectuals' responsibility) The philosophical domain of the profession.

All institutions and bodies associated with architecture, first and foremost educational institutions, could develop healthy relationships with other fields, work to create synergies, and develop common discussion and platforms using new technologies and media. At a time when international relations have become closer, discussion platforms could be formed through mutual dialogue and interaction; could expand with the input of architects and other professionals from different platforms (such as chambers of professionals, educational institutions, local authorities, non-governmental organisations, virtual platforms, etc.); and support a widespread educational policy. Some joint principles for such activities might be the following:

i. Integral approach (accept interdisciplinary interaction and the approach of a multidimensional design process).
ii. Sensitivity in design (an approach creating and developing sensitivity to social, environmental, economic, psychological and ethical concerns).
iii. Social and historical consciousness in design (an approach to conservation15 that is aware of the natural, cultural and historical values of the built environment).
iv. A sustainable approach (a system to develop 'sustainability' as a natural characteristic of the design process) It is hereby stated that most important aspect to be stressed is the dynamism of the process. All approaches that strive to adapt to social changes are bound to be 'changeable'. Therefore, the educational programmes should be reformed and updated in line with changing social circumstances.

XIV. Conclusion

Among the philosophies that have influenced modern architects and their approach to building design are rationalism, empiricism, structuralism, post structuralism, and phenomenology. Architectural theory is the act of thinking, discussing, and writing about architecture. Architectural theory is taught in most architecture schools but with little emphasis on practical translation and application by most students because every student of architecture is assumed to be creative prima facie. Although there are geniuses amongst them but it should not be a subject of generalisation. Some forms that architecture theory takes are the lecture or dialogue, the treatise or book, and the paper project or competition entry. Architectural theory is often didactic, and theorists tend to stay close to or work from within schools. It has existed in some form since antiquity, and as publishing became more common, architectural theory gained an increased richness.

The complex foundation of architectural education resides in the questions we have about both the considerations of architecture as logical knowledge and the truth of our Poetic imagination. The current challenge is to tailor architecture to meet global environmental and interdisciplinary tendency to further enrich it.

Prospective architects face the challenge of discovering ideas, and more importantly methods, in the architectural education, and adding them to the creative process that lies at the heart of the profession. In other words, the developing professional culture and philosophy of education should trigger a common attitude of the professional platform against the threat of

© 2020 Global Journals

a 'single type of communication' in the globalization process.

In the late 20th century a new concept was added to those included in the compass of both structure and function, the consideration of sustainability. To satisfy the contemporary ethos a building should be constructed in a manner which is environmentally friendly in terms of the production of its materials, its impact upon the natural and built environment of its surrounding area and the demands that it makes upon non-sustainable power sources for heating, cooling, water and waste management and lighting.

Basic design cannot be conceived in isolation from the plastic arts, literature, music, social sciences or philosophy. Like all the other arts, the function of architecture is hidden inside its product. 'Space' becomes a work of 'architecture' with the idea it puts forward.

References Références Referencias

1. Alberti, L. (1976). On Painting, translated by John R. Spencer (New Haven: Yale University Press,)
2. Aldo, R. (1966). Architettura della Citta", University Press, Cambridge ISBN 0-521-00292- 3.
3. Alofsin, A. (2002). The struggle for modernism: architecture, landscape architecture and city Planning at Harvard, W. W. Norton, New York.
4. Baljon, C. J. (2002). History of history and canons of design. *Design Studies, 23*(3), 333-343.
5. Barthes, R. (1977). Image-Music-Text, London, Flamingo.
6. Bauman, Z. (1977). Yasakoyucular ile Yorumcular (Legislators and Interpreters), trans. by: Atakay, Bedford and Groák.
7. Blackburn, S. (2008). Oxford Dictionary of Philosophy, second edition revised. Oxford: Oxford University Press, ISBN 978-0-19-954143-0.
8. Brown, F, Cooper, G. S. R. and Young, B. (1995). An integrated approach to CAD: modeling concepts in building design and construction, Design Studies, 16 327-347., Ford, S., Aouad, G., Brandon, P., Child, T., Kirkham, J. A., Oxman.
9. Burry, M and Murray, Z. (1997). Architectural Design Based on Parametric Variation and). Associative Geometry, Challenges of the Future: 15th eCAADe Conference Vienna (Austria).
10. Cennino d'Andrea, C. (1960). The Craftsman's Handbook: "Il Libro dell Arte", translated by Daniel V. Thompson, Jr. (New York: Dover Publications, Inc.,
11. Charlton, K. (1973). The education of the professions in the sixteenth century in T. G. Cook (ed.) Education and the professions Methuen & Co Ltd, London, pp. 19-27.
12. Cross, N. (1977). the automated architect, Pion, London.
13. Eraydın, A. (2002). "Küresellesme-Yerellesme ve Ilevleri Farklılasan Kentler", ("Globalization-Localization and the Cities' Changing Functions"), prof. Dr. Cevat Geray'a. Hammermeister, Kai. *The German Aesthetic Tradition.* Cambridge:
14. Gass, W (1971). Fiction and the Figures of Life (Boston: David R. Godine,) Cambridge University Press.
15. Glasser, W. (2000). Counseling with choice theory: The new reality therapy. Los Angeles: Quill.
16. Habraken, J. (1998). The Structure of the Ordinary, (ed.) Jonathan Teicher, The MIT Press.
17. Hanno-Walter. K. (1994). *A history of architectural theory: from Vitruvius to the present*. Princeton Architectural Press,. ISBN 1-56898-010-8.
18. Haraway, D. (1985). "Manifesto for Cyborgs: Science, Technology and Socialist Feminism in the 1980's", Socialist Review.
19. Harry, F. (2005). *Modern Architectural Theory: A Historical Survey, 1673-1969*. Cambridge University Press, ISBN 0-521-79306-8
20. Heidegger, M. (1987). An Introduction to Metaphysics, Ralph Mannheim, translator (New Haven: Yale University Press,).
21. Hill, J. (1998). Occupying Architecture, Between the Architect and the User, Routledge London and New York.
22. Hoberman, S and Mailick, S. (1994). professional education in the united states: experiential learning issues & prospects west port, C T praeger.
23. Kalay, Y. (1998), P3: Computational environment to support design collaboration, Automation in Construction, 8 (1), 37-48.
24. Kaygalak, S. (2001). "Sembolik Sermaye, Yoksulluk ve Kent" ("Symbolic Capital, Poverty and the City"), Prof. Dr. Cevat Geray'a Armagan, Mülkiyeliler Birligi Yayınları: Ankara.
25. Kvan, T. (2000), Collaborative design: what is it? Automation in Construction, 9 (4), 409-415.
26. Lawson, B. (2001). The language of space, Oxford: Architectural Press.
27. Brown, J. and Dugiud, P. (2002) The social life of information,. www.asla.org.au/pubs/access/a_commentary_170203.ht
28. McEwen, I. (2003). Vitruvius: Writing the Body of Architecture, Cambridge Massachusetts: The MIT Press.
29. Mc Leod, M. (1947). "Henri Lefebvre's Critique of Everyday Life: An Introduction", Architecture of the Everyday, Harris, S., Berke, D., (ed), Princeton Architectural Press, Yale Publications on Architecture.
30. Merleau-Ponty, M. (1993). "Eye and Mind," in The Merleau-Ponty Aesthetics Reader: Philosophy and

© 2020 Global Journals

Painting, ed. Galen A. Johnson, Evanston, Ill., 132, 124, 128-9, 136.
31. Merleau-Ponty M, (1962). Phenomenology of Perception, trans. Colin Smith, London, Routledge & Kegan Paul Ltd, 214, 207.
32. Michael, K. (1998). *Architecture Theory since 1968*. Cambridge: MIT Press, ISBN 0-262-88-4.
33. Pallsamaa, J. (1999). "Between Uniqueness and Uniformity", Ung Dansk Arkitektur, Design, Arkitektens Forlag.
34. Rowland, D. and Howe, N. (1999). Vitruvius. Ten Books on Architecture. Cambridge University Press, Cambridge ISBN 0-521-00292-3.
35. Teymur, N. (1998). "Tasa (r) lanacak Bir Dünya Için Temel Tasarım Egitimi", Önsöz, ("Basic Design Studies for a World to be Designed", Introduction).
36. Tochtermann, W. (2002). Approval for Architectural Education Unesco-UIA Council Report, trans. by: A. Ülkütekin, unpublished report, Berlin.
37. Venturi, R. (1976). "Complexity and Contradiction" Architectural Press, Yale Publications on Architecture.

© 2020 Global Journals

This page is intentionally left blank

© 2020 Global Journals

Global Journal of human-social science: G
Linguistics & Education
Volume 20 Issue 3 Version 1.0 Year 2020
Type: Double Blind Peer Reviewed International Research Journal
Publisher: Global Journals
Online ISSN: 2249-460X & Print ISSN: 0975-587X

L'influence Du Désir De Personnalisation De La Gestion De Carrières Sur La Fidélité Des Enseignants Vis-À-Vis De Leur Profession Au Cameroun

By Imelé Tsafack Stéphanie Julienne

Université de Dschang-Cameroun

Abstract- The objective of this work is to highlight the likely impact of Human Resources management personalization oriented toward career management and recruitment of secondary school teachers loyalty in Cameroon. This study passed through tow stages. Firstly, an exploratory qualitative study through an interview guide. This exploratory qualitative study permited us to notice that teachers have a favourable opinion on having to choose their own conditions of work in general and to list the axes of personalization custumization that can be taken into account in teaching resources management. Thereafter, the quantitative study has been carried out and data collection was done through a questionnaire administred on a sample of 414 secondary school teachers. These collected data were analized from the structural equations modeling. It shows that teachers feel an injustice linked to a uniform treatmentof staff, distributive injustice and procedural and express a desire to personalize their their treatment. All this negatively affect their loyalty vis-avis their profession (organizational commitment and intention to quit).

Keywords: *loyalty, career, recruitment, injustice, teacher.*

GJHSS-G Classification: *FOR Code: 130399*



Strictly as per the compliance and regulations of:

© 2020. Imelé Tsafack Stéphanie Julienne. This is a research/review paper, distributed under the terms of the Creative Commons Attribution-Noncommercial 3.0 Unported License http://creativecommons.org/licenses/by-nc/3.0/), permitting all non-commercial use, distribution, and reproduction in any medium, provided the original work is properly cited.

L'influence Du Désir De Personnalisation De La Gestion De Carrières Sur La Fidélité Des Enseignants Vis-À-Vis De Leur Profession Au Cameroun

Imelé Tsafack Stéphanie Julienne

Resume- Cette thèse a pour objectif de mettre en évidence l'impact probable d'une GRH à la carte orientée vers la gestion de carrière et le recrutement sur la fidélité des enseignants du secondaire au Cameroun. L'étude s'est faite en deux étapes : d'abord une étude qualitative exploratoire par le biais d'un guide d'entretien. Cette étude qualitative exploratoire a permis de constater que les enseignants ont un avis favorable pour une gestion du personnel à la carte et de répertorier les axes de la personnalisation pouvant être pris en compte dans la gestion de la ressource enseignante. Par la suite, une étude quantitative a été menée et la collecte de données s'est faite via un questionnaire administré sur un échantillon de 414 enseignants du secondaire. Ces données ainsi recueillies ont été analysées à partir de la modélisation en équations structurelles. Il en ressort que les enseignants ressentent une injustice liée à un traitement uniforme du personnel, injustice distributive et procédurale et expriment un désir de personnalisation de leur traitement. Tout ceci affecte négativement leur fidélité vis-à-vis de leur profession (implication organisationnelle et intention d'abandon). Ceci dit, nous suggérerons à l'État camerounais d'opter pour une gestion personnalisée du personnel enseignant (en matière de gestion de carrière et de recrutement) afin de resorber l'injustice perçue et de booster la fidélité.

Motsclés: fidélité, carrière, recrutement, justice, enseignant.

Abstract- The objective of this work is to highlight the likely impact of Human Resources management personalization oriented toward career management and recruitment of secondary school teachers loyalty in Cameroon. This study passed through tow stages. Firstly, an exploratory qualitative study through an interview guide. This exploratory qualitative study permited us to notice that teachers have a favourable opinion on having to choose their own conditions of work in general and to list the axes of personalization custumization that can be taken into account in teaching resources management. Thereafter, the quantitative study has been carried out and data collection was done through a questionnaire administred on a sample of 414 secondary school teachers. These collected data were analized from the structural equations modeling. It shows that teachers feel an injustice linked to a uniform treatmentof staff, distributive injustice and procedural and express a desire to personalize their their treatment. All this negatively affect their loyalty vis-avis their profession (organizational commitment and intention to quit). We therefore suggest that government of Cameroon should seek to personaliza teaching staff management (in matter of career and recruitment) in order to absorb perceived injustice and to boost loyalty.

Keywords: loyalty, career, recruitment, injustice, teacher.

I. Introduction

Les stratégies de la motivation instituées par Taylor depuis les années 1930 s'avèrent aujourd'hui insuffisantes avec l'évolution du contexte économique et démographique, l'arrivée de la nouvelle génération de travailleurs avec de nouvelles exigences vis-à-vis de l'emploi. Dans le secteur éducatif, les pertes de compétences du fait de la mobilité des ressources humaines sont considérables. Les états généraux de l'éducation au Cameroun organisés en 1995 soulignaient en matière de gestion des ressources humaines l'absence d'une politique clairement définie d'affectation, mutation et nomination du personnel (Ajountimba, 2006). Suite à ce constat, quelques recommandations ont été faites en vue de rationaliser la gestion du personnel enseignant. C'est ainsi qu'on a vu naître la publication des textes officiels relatifs à l'orientation de l'éducation au Cameroun, à l'organisation du ministère et au statut des personnels. Mais, ces dernières décennies au Cameroun, on observe un personnel enseignant en perpétuel mouvement. D'ailleurs, une récente communication[1] du Ministre des enseignements secondaires camerounais a fait état de ce qu'en 2017, sur 68000 enseignants déjà formés, 48000 seulement sont en service et 20000 disparus. Selon lui, la cause de ce problème serait la migration des enseignants vers d'autres administrations et la conséquence en est le budget d'APE élevé et la piètre qualité des enseignements dispensés par les vacataires peu qualifiés.

La question de la rétention du personnel et des raisons qui motivent les travailleurs à maintenir ou rompre le lien d'emploi n'est pas récente. La littérature fait état de deux courants majeurs en recherche: un

Author: Université de Dschang-Cameroun, Douanla Jean Christian, Université de Dschang-Cameroun. e-mail: simeletsafafck@gmail.com

[1] Le Ministre des enseignements secondaires, son Excellence Jean Ernest NGALLE BIBEHE sur les entènes de Canal 2 international à l'émission « questions aux membres du gouvernement, Décembre 2017.

© 2020 Global Journals

premier courant de nature prédictive s'intéressant au *roulement du personnel* et un second davantage prescriptif orienté vers la *rétention du personnel*. Ce dernier courant tente d'identifier les facteurs qui lui sont déterminants afin d'implanter des incitatifs répondant aux attentes des employés dans le but de les retenir.

Nombre d'études ont été réalisées afin de mesurer le *roulement de personnel*, d'en prédire l'ampleur et de comprendre ce qui peut pousser un individu à conserver ou à quitter son emploi (March et Simon, 1958; Mobley, 1977; Mobley, Griffeth, 1979; Steers et Mowday, 1981; Lee et Mitchell, 1994; Griffeth et Hom, 2001). Dans une étude menée par Maertz et Campion (1998), ces derniers montrent que la satisfaction au travail, l'engagement organisationnel, l'implication au travail, la perception des alternatives d'emploi, l'estimation des coûts dans la décision de rester ou de quitter; les pressions normatives non-liées à l'emploi; le lien moral; le contrat psychologique; et l'attachement aux constituants de l'organisation agissent comme des forces psychologiques qui agissent sur la décision de rester ou de quitter selon son entreprise.

La recension des écrits fait ressortir quatre types de variables étudiées dans le contexte de la rétention soit: celles liées à l'environnement organisationnel (satisfaction, stress, soutien, communication, participation à la prise de décision, engagement organisationnel et opportunités d'avancement), à l'emploi (perception de la charge de travail, attentes face à l'emploi, ambiguïté et conflit de rôle, autonomie, reconnaissance et développement professionnel), à la rémunération globale (salaire de base, avantages sociaux et vacances, équité salariale interne/externe, actionnariat, partage des bénéfices et autres), ainsi que celles associées à la qualité de vie au travail (équilibre travail-famille, flexibilité des horaires, télétravail et services de garderie).

À la question de savoir ce qui pourrait justifier la décision d'un salarié de rester dans une entreprise et d'agir dans l'intérêt de celle-ci, les avis semblent partagés. Plusieurs facteurs sont positivement reliés à la propension des employés de demeurer au sein des entreprises qui les emploient. De façon générale, on peut citer: un taux de satisfaction au travail élevé (Sigler, 1999), une rémunération satisfaisante (Appelbaum et Mackenzie, 1996; Heneman et *al*., 1998; Sigler, 1999), une culture organisationnelle axée sur les relations interpersonnelles au détriment des tâches (Sheridan, 1999), et un environnement de travail favorisant les opportunités de développement professionnel et d'avancement, la reconnaissance, la communication et l'équilibre travail-famille (Greenhaus,1971).

L'uniformisation des conditions d'emploi des salariés est désuète de nos jours. Les auteurs actuels pensent qu'il faut, au sein des organisations, mettre sur pied une GRH qui se rapproche du projet personnel de chaque salarié, les attentes des salariés vis-à-vis de l'emploi étant divergents.

Beffat et al., (1999) l'expriment en ces termes: « la diversité des composantes des relations d'emploi l'emporte sur la convergence d'un modèle unifié ». Les salariés d'aujourd'hui, à la différence de ceux des années 1980, réclament plus de liberté et d'autonomie, ils désirent avoir le contrôle de leur destinée. Pour y parvenir, les organisations doivent offrir des conditions d'emploi flexibles.

Bouchikhi et Kimberly (1999) considèrent ainsi qu'il faut s'efforcer de personnaliser le milieu de travail. Ces derniers font un rapprochement entre le pouvoir de choix des consommateurs et celui des salariés. Les salariés ont de plus en plus tendance à devenir les « *architectes proactifs de leur plan stratégique personnel et de leurs relations avec leur milieu de travail* » disent-ils. Dès lors, les salariés demandent davantage de participation, de partage du pouvoir, de confiance, de flexibilité et de liberté.

Dans le cadre de cette recherche, nous sommes concernés par les relations entre le sentiment de justice organisationnelle perçu et les attitudes des enseignants du secondaire vis-à-vis de leur profession. Nous voudrons vérifier si le désir d'une gestion personnalisée des ressources humaines peut justifier le sentiment d'injustice tant exprimé par les enseignants ainsi que leur infidélité vis-à-vis de leur profession.

La suite du papier va se faire dans la logique séquentielle de la revue de la littérature, de la méthodologie, des résultats et enfin de la conclusion.

II. Revue de la Littérature

Plusieurs facteurs peuvent expliquer les attitudes d'un individu à l'égard de l'entreprise. Dans cette section, il est question pour nous de mettre en évidence les facteurs qui déterminent les attitudes au travail et les leviers sur lesquels s'appuyer afin d'en corriger les manquements.

Plusieurs études ont montré l'existence d'un lien entre les attitudes au travail et la satisfaction des salariés (Kenf-Nintewe, 2014). Il s'agit pour nous dans ce paragraphe de préciser les aspects de ces concepts sur lesquelles agir si l'on désir influencer les attitudes des individus au travail. Mais avant de mettre en lumière ce lien, définissons tout d'abord ces concepts.

Pinder (1984), estime que la motivation au travail est « un ensemble de forces énergétiques qui proviennent aussi bien de l'intérieur de l'être humain que de son environnement, pour susciter le comportement lié au travail, et pour déterminer sa forme, sa direction, son intensité et sa durée ». Roussel (2000) définit la motivation comme étant « le construit hypothétique utilisé afin de décrire les forces internes et/ou externes produisant le déclenchement, la direction, l'intensité et la persistance du comportement ». Cette définition met

© 2020 Global Journals

en exergue la difficulté d'observer directement la motivation d'une personne. Elle est un construit hypothétique, un type de comportement que tout individu est supposé pouvoir développer. Il s'agit d'un processus qui est déclenché à l'origine par l'action d'une force motivationnelle intérieure qui dépend des caractéristiques personnelles comme les besoins, les pulsions, l'instinct, les traits de personnalité (hédonisme[2], crainte, convoitise, avidité, jalousie…). Il peut être déclenché aussi par une force motivationnelle externe qui dépend de la situation, de l'environnement de travail, de la nature de l'emploi, du mode de management des supérieurs etc.

Ces facteurs de motivation internes ou dispositionnels, et externes ou situationnels sont changeants et propres à chaque individu. Le niveau de motivation peut être soit fort, soit faible, variant à la fois entre les individus à des moments déterminés, et chez le même individu à différents moments et selon les circonstances (Pinder 1984, Roussel 2000).

Le terme « satisfaction » est quasiment consubstantiel aux études de motivation; c'est pourquoi on ne peut le passer sous le silence, au risque de se laisser prendre par les glissements sémantiques qui caractérisent les usages commun de ces termes. Le petit dictionnaire Robert la définit comme « le sentiment de bien-être, le plaisir qui accompagne l'accomplissement de ce qu'on attend, ce qu'on désire, ce qu'on souhaite ». La satisfaction au travail partage de ce fait les mêmes difficultés d'appréhension que la motivation, étant comme elle une réaction intrapsychique résultant de l'évaluation par l'individu de ses activités de son travail ou de son emploi, et du sentiment que les résultats obtenus à travers celui-ci sont conformes à ses attentes, à ses aspirations comme à ses valeurs. Elle est définie par Dion (1986) comme étant « un état affectif résultant de la concordance entre ce qu'un individu s'attend de recevoir de son travail (contenu de la tâche, relation de travail, salaire, occasion de promotion, et toute autre condition de travail) et l'évaluation de ce qu'il reçoit effectivement ». Certains penseurs à l'instar des partisans de l'école des relations humaines disent qu'un employé satisfait fournira une bonne performance; ils posent généralement un modèle dans lequel la production augmente avec le niveau de satisfaction (Bergeron, 2007).

Deux principales théories font le liens théoriques entre la justice organisationnelle et la fidélité vis-à-vis de l'organisation à savoir la théorie de l'équité et la théorie de la justice organisationnelle.

La théorie de l'équité (Adams, 1963) explique la motivation au travail par la disposition de l'individu à comparer sa situation personnelle à celles d'autres personnes. Adams cherche à préciser dans quelles conditions le rapport entre ce que fait l'individu comme travail et ce que le travail lui apporte est jugé comme équitable ou non. Il suggère que le sentiment d'équité résulte d'un processus d'échange marchand entre l'organisation et ses membres. En outre, cette comparaison met en jeu ce que l'individu apporte à l'organisation (inputs) en terme de performance, de niveau de formation, de compétence, d'efforts etc. et ce qu'il reçoit de l'organisation(outputs) en terme de salaire, conditions de travail, statut, reconnaissance, promotions etc.

L'individu établit le ratio Ap/Cp avec Ap = Avantages retirés de l'emploi et Cp =contribution en faveur de l'entreprise.

Puis il compare ce ratio à celui qu'il perçoit concernant d'autres personnes. Si ces deux ratios sont égaux, il éprouve un sentiment d'équité et le cas échéant, il manifeste un sentiment d'inéquité, soit de sous-équité soit de sur-équité. Dans ce dernier cas, l'individu va adopter certains comportements visant à réduire le déséquilibre ou à établir l'équilibre. Il pourrait par exemple modifier ses contributions dans son emploi, quitter l'entreprise, demander une mutation ou une promotion ou encore une augmentation de salaire. Il pourrait également changer la perception de la situation en prenant de nouvelles personnes comme points de comparaison.

En ce qui concerne la théorie de la justice organisationnelle, elle a été développée par Greenberg en 1987. Elle ne s'oppose pas à la théorie de l'équité, mais la complète. Greenberg propose dans sa théorie de distinguer deux dimensions de l'équité dans les organisations à savoir la justice distributive et la justice procédurale ou justice des processus. Pour lui, le sentiment d'équité tel que perçu par Adams est apte à rendre compte du sentiment de justice distributive. Cependant, il propose de joindre à ce construit et à l'analyse qui en est faite le sentiment de justice vis-à-vis des procédures et des processus mis en œuvre dans l'organisation.

Cette justice procédurale concerne essentiellement des processus mis en œuvre pour prendre des décisions d'attribution des récompenses tels que le système d'évaluation des performances, les processus d'avancement, les processus d'appel des décisions et processus de participation aux prises de décisions. Selon la place qui est réservée à l'individu dans ces processus, il se sentira traité équitablement ou non.

D'autres théories expliquent les attitudes et comportement au travail.

Développée par Homans et al. (1958), la théorie de l'échange socialstipule que l'entreprise cherche à développer une relation durable avec certains salariés; ce qui se traduit par des relations sociales de qualité, une politique de communication et une recherche du bien-être de salariés (Peretti, 2005). Le contrat

[2] Hédonisme : morale qui fait du plaisir le but de la vie.

© 2020 Global Journals

psychologique permet d'appréhender la relation d'emploi entre la personne et son organisation. Le contrat psychologique peut être défini comme un ensemble de croyances individuelles sur les obligations mutuelles qui existent entre l'employeur et le salarié (Rousseau, 1990). On retrouve ainsi l'opposition entre deux types de contrats à savoir le contrat transactionnel et le contrat relationnel.

Initialement élaborée par Tajfel (1978), puis reprise par Turner (1985), la théorie de l'identité socialefait ressortir la notion de prestige externe ou celle de l'image employeur qui a été définie comme la manière selon laquelle un membre d'une organisation interprète et évalue la réputation de son organisation. Cette théorie explique à la fois la fidélité d'un consommateur à l'égard d'une marque et la fidélité d'un salarié à l'égard de son entreprise.

Pour Adams (1963) qui a appliqué la théorie de la dissonance cognitive aux relations salariales, « il y a inéquité pour une personne chaque fois que ses contributions perçues, dans un emploi et/ou son revenu, est psychologiquement dans une relation inverse avec ce qu'il perçoit être les contributions et/ou rétributions de l'autre. » (Adams cité par Grard Delphine, 2010). En effet, l'individu se compare à un groupe de référence qui peut être de trois natures différentes: soit il se compare à des personnes qui occupent le même poste dans la même entreprise, soit des postes différents dans la même entreprise, ou enfin les salariés des autres entreprises. D'après Lévy-Leboyer, 2006) « un système de récompenses qui semble injuste ou peu objectif aura des effets inverses de ceux recherchés ».

Il existe deux théories économiques du salaire d'efficience qui ont recours à une fonction d'effort: le modèle de Solow (1979) et le modèle du tire-au-flanc de Shapiro et Stigliz (1984).

Le modèle de Solow se place dans une perspective microéconomique. Il s'intéresse essentiellement à la performance de l'entreprise qui peut résulter de la mise en place d'un salaire d'efficience. Dans ce modèle, on considère que la production est fonction du travail au même titre qu'un autre facteur. Autrement dit, le salarié est une machine qui selon son intensité de travail produit un nombre défini d'unités par heure (Cahuc, Zylberberg, cité par Grard Delphine op cit). La principale différence avec une machine ici est le fait que le salarié peut décider de l'intensité de son travail; celle-ci dépend d'un choix de la part du salarié.

Pour Solow, cette intensité correspond à l'effort; l'employeur doit donc faire en sorte qu'il soit aussi dans l'intérêt du salarié de fournir cet effort et Solow utilise pour cela le salaire.

Comme l'effort dépend du salaire réel (w), il définit une fonction d'effort e(w) qui est croissante avec w, mais supposée décroissante à partir d'un certain niveau de salaire. La fonction du salaire dans ce modèle est donnée par F(Le(w)) où Le correspond à la quantité de travail efficace produite par les salariés et qui dépend du salaire (w) versé à ces salariés.

A partir de cette fonction de production, Solow dégage la fonction de profit de l'entreprise:

$$Max\ \pi_{=} \text{F(Le(w))}-\text{wL}$$

Où wL est le montant des salaires versés à l'ensemble des salariés.

Cependant, le salaire w doit être supérieur au salaire qui pourrait être proposé au salarié par une autre entreprise (Wu). Dans le cas contraire, le salarié risque de ne pas accepter le contrat.

Cette théorie peut véritablement s'appliquer à cette thèse en ce sens qu'elle pourra permettre de développer des incitatifs qui, appliqués au salaire d'un enseignant selon ses conditions de travail, pourront le maintenir à son poste.

Dans la théorie de la dynamique essentielle de Lewin (1951) qui lie le comportement humain aux stimuli de l'environnement. Cette théorie stipule que l'environnement psychosociologique du groupe de travail influence les résultats de ce dernier (Brunet, 2001). Il l'exprime à travers la formule C= f (P x E) qui signifie que le comportement (C) de l'individu subit l'influence de sa propre personnalité (P) et celle de l'environnement qui l'entoure (E) pour produire les perceptions. Ceci explique le fait que des populations comparables dans des établissements apparemment semblables n'obtiennent pas les mêmes résultats. En effet, dans un environnement il peut régner deux types de climat à savoir un climat autoritaire et un climat participatif. Chacun de ces deux types de climat détermine d'une manière spécifique le comportement de ceux qui travaillent dans un environnement.

Cette théorie, appliquée à la présente thèse, nous permettra de mettre en relief le rôle de l'environnement dans l'explication des comportements et attitudes du salarié au travail.

Developpée par Ajzen (1985), la théorie du comportement planifié decoule d'un constat selon lequel les individus n'agissent pas toujours conformément à leurs attitudes. Son objectif est donc de déterminer les paramètres et les processus permettant de'expliquer et de prédire les comportements humains. Il s'agit en réalité d'une extension de la théorie de l'action raisonnée (TAR) de Fihbein et Ajzen (1975) selon laquelle le comportemnent découle d'une intention (motivation interne) qui à son tour est la résultante de l'attitude et d'une norme subjective. Cette norme subjective est la perception qu'a l'individu des jugements de son entourager relativement à l'adoption ou non d'un comportement. Mais, la TAR ne prend pas en compte le contrôle que le sujet pense avoir sur ses actes. La TCP vient combler

© 2020 Global Journals

ce déficit en ajoutant aux éléments de la TAR le contrôle comportemental perçu (Nohotio, 2017). Il s'agit des croyances qu'a le sujet relativement à ses ressources, ses capacités, ses opportunités ainsi que l'importance relative qu'il accorde au comportement dont il est question.

Toutes les théories présentées ci-dessus permettront donc d'appréhender la fidélité de l'enseignant vis-à-vis de sa profession.

III. Methodologie

Etant donné que nous sommes intéressés à connaître les facteurs conditionnant un certain aspect du comportement de l'acteur social mis au contact d'une réalité. Nous-nous servons d'un modèle interprétatif (qualitatif) où l'accent est mis sur les processus qui se développent au sein des acteurs (ici, on est intéressé par les significations que l'acteur attribue à son environnement de même qu'à ces interprétations) avant une étude quantitative.

a) Recherche Qualitative

i. *Méthode de recueil des informations adoptée.*

Dans ce travail, nous avons préféré l'entretien sémi-directif centré comme méthode de collecte de données. Pour Romelaer (2005) cité par Colle (2006), l'entretien semi-directif centré est un entretien « *dans lequel le chercheur amène le répondant à communiquer des informations nombreuses, détaillées et de qualité sur les sujets liés à la recherche, en l'influençant très peu, et donc avec des garanties d'absence de biais qui vont dans le sens d'une bonne scientificité* ». Nous avons choisi cette méthode pour plusieurs raisons. D'abord, cette méthode nous a permis de concilier les choix présents dans la littérature et ceux proposés spontanément par les répondants ce qui a permis l'émergence des choix qui n'ont pas été évoqués dans la littérature, mais qui devraient être pris en considération dans l'élaboration de notre questionnaire. Nous rejoignons Romelaer op cit qui pense que l'entretien semi-directif centré procure au chercheur non seulement des informations sur ce qu'il cherche a priori, mais aussi les données auxquelles il n'aurait pas pensé, c'est-à-dire venant de la réalité du terrain.

« *L'entretien semi-directif présente l'avantage d'être un instrument éprouvé qui offre une bonne garantie pour l'obtention de résultats robustes et significatifs* », affirme Colle (2006). Cette validité lui vient de la spontanéité des réponses et de la multiplicité des entretiens. Par opposition à l'entretien directif, les informations issues de l'entretien semi-directif centré sont plus riches. Pour bien mener cet entretien, nous avons eu recours au guide d'entretien. Dans le paragraphe suivant, les caractéristiques de cet instrument seraient présentées.

ii. *Le guide d'entretien*

Nous voulions par cet entretien non seulement répertorier les choix dont disposent les enseignants actuellement dans leur emploi et ceux qu'ils souhaiteraient bénéficier, mais également nous cherchions à vérifier leur degré de satisfaction vis à vis de leur traitement actuel et l'impact que tout cela peut avoir sur leurs attitudes au travail.

iii. *Contenu des questions*

Pour ce qui est de l'élaboration de ce questionnaire, le contenu portait effectivement sur les choix dont disposent les enseignants actuellement dans leur emploi et ceux qu'ils souhaitent davantage disposer d'une part et d'autre part leur avis par rapport à l'implémentation de la GRH à la carte et l'impact que cela pourrait avoir sur leurs attitudes au travail.

iv. *Format des questions*

Ce guide était constitué des questions ouvertes avec relances.

Après son élaboration, nous avons soumis ce guide à deux doctorants qui nous ont suggéré des modifications, modifications qui ont été intégrées afin d'obtenir une deuxième version du questionnaire. Cette deuxième version du guide d'entretien a été soumise à deux enseignants pour le prétest ce qui nous a permis de modifier certains énoncés.

La version finale du guide présenté en annexe nous a permis de mener les entretiens. Ce guide comportait quatre phases à savoir

1) *La mise en confiance du répondant:* cette phase est capitale, car elle permet au répondant d'être sincère dans les réponses. Avant de commencer tout entretien avec une personne, nous commencions par présenter notre posture de chercheur et les objectifs de la recherche et de l'entretien, ce qui garantissait l'anonymat et la confidentialité des informations fournies.
2) *La phase d'entame de l'entretien:* la question d'entame de l'entretien consistait tout simplement à vérifier si l'enseignant perçoit qu'il a une certaine liberté de choix dans sa profession que ce soit au niveau de la haute hiérarchie ou au niveau de son lieu de service actuel.
3) *Pendant l'entretien:* par la suite, une succession de question ouverte était adressée au répondant (questions relatives aux choix actuellement disponibles, aux choix souhaités, à leur avis par rapport à l'implémentation de la GRH à la carte dans leur profession et à l'influence de tels choix sur leurs attitudes au travail). Nous utilisions constamment les questions de relance du genre « pouvez-vous être un peu plus explicite ? », « pouvez-vous en donnez quelques exemples ? », « qu'est-ce que cela veut dire exactement ? », « quoi

© 2020 Global Journals

d'autres ? », « pouvez-vous être un peu plus explicite ? ». Ces relances étaient utilisées dans l'objectif de recentrer l'interviewé avait tendance à s'éloigner du sujet.

4) A la fin de l'entretien, nous-nous rassurions que l'interviewé ne voit plus un autre point à évoquer, puis nous lui disions merci.

v. *La conduite des entretiens*

Rogers (1980) et Quivy et Van Campenhaudt (1995) recommandent de respecter les conditions suivantes dans la conduite des entretiens:

- Le chercheur doit s'efforcer de poser le moins de questions possible.
- Le chercheur doit s'efforcer de formuler ses interventions d'une manière aussi ouverte que possible.
- Le chercheur doit éviter de s'impliquer lui-même dans le contenu de l'entretien.
- Il faut veiller à ce que l'entretien se déroule dans un environnement et un contexte adéquats.
- Sur le plan technique, il est très indispensable d'enregistrer les entretiens et utile de noter de temps en temps quelques mots.

Lors du déroulement de nos entretiens, nous nous sommes efforcée à prendre en compte ces recommandations.

Les entretiens se sont déroulés dans les lieux de service, pendant les heures de pause. D'entrée de jeu, nous expliquions notre démarche et les objectifs de notre enquête au répondant. Notre statut d'enseignant a fortement contribué en notre faveur dans la mesure où il permettait au répondant de comprendre que nous sommes enseignant comme lui et par conséquent, indépendant vis-à-vis du MINESEC (Ministère des Enseignements Secondaires) et ses différents démembrements. Aussi, nous garantissions la confidentialité des informations recueillies. Durant les entretiens, nous avons adopté une attitude de neutralité afin de limiter notre influence sur les réponses des répondants. Cependant, nous faisions preuve d'une grande attention en manifestant des signes d'acquiescement et de compréhension et des questions de relances étaient employées afin d'obtenir des précisions de la part du répondant. Nous évitions également de porter un jugement sur le contenu du discours de la personne interviewée afin de laisser à ce dernier la possibilité et la liberté d'aborder les thèmes qui l'intéresse.

La procédure de conduite de nos entretiens ayant été spécifiée, nous allons à présent nous attelés à en présenter le nombre.

vi. *Le critère de saturation*

Selon Romelaer (2005), l'entretien semi-directif centré est un moyen d'enquête apportant une grande richesse à l'analyse. Mais ce moyen est extrêmement lourd et couteux pour le chercheur et la question qui se pose dès lors est celle de savoir quel nombre d'entretiens minimum faut-il pour que le chercheur reste pertinent par rapport au sujet de recherche et à la méthode choisis. Ici se soulève la question de la saturation sémantique selon laquelle. Pour Colle (2006), c'est la qualité et la richesse des entretiens qui compte et non leur nombre. Romelaer op cit recommande donc de prendre en compte le critère de saturation sémantique qu'il exprime en ces termes: « *quand on cherche à voir dans quelle mesure les descripteurs pertinents du sujet de recherche déjà identifiés par la littérature sont présents dans le terrain étudié ou quand on veut identifier des descripteurs qui n'ont pas encore été mentionnés par des chercheurs ou des experts (…), le critère n'est pas le nombre d'entretiens, mais la saturation sémantique* (…) » (Romelaer, 2005).

La saturation exige la vérification des deux conditions ci-dessous:

- Il faut que les derniers entretiens n'apportent plus aucune information nouvelle par rapport à celles obtenues dans les entretiens précédents.
- L'échantillon doit être suffisamment divers, c'est-à-dire comporter au moins une modalité de chaque critère. Il ne s'agit ni de rechercher une représentativité statistique ni un échantillon complet, mais d'explorer des situations variées « l'idée ici n'est pas d'avoir une représentativité statistique et un échantillon complet. L'idée est d'avoir exploré suffisamment la variété des situations » (Romelaer, 2005).

Dans le cadre de notre étude, nous avons tenu à respecter ces conditions. Pour la première, nous avons attendu que les trois derniers entretiens ne nous apportent plus aucune information nouvelle. En ce qui concerne la seconde, nous avons veillé à prendre en compte toutes les caractéristiques de l'échantillon (les enseignants opérant dans des zones reculées et ceux opérant dans les centres urbains, les enseignants de salle et les membres de l'administration scolaire, les jeunes et les âgés, les enseignants travaillant dans des régions différentes …). Les résultats de cette étude quantitative seront présentés dans la section suivante.

b) Recherche Quantitative

i. *Echelles de mesure des variables*

Dans cette sous-section, nous allons préciser les critères de choix des échelles de mesure et les échelles de mesure retenues pour les différentes variables.

ii. *Le questionnaire.*

iii. *La rédaction du questionnaire*

Tout au long du paragraphe précédent, nous avons présenté les échelles de mesures de différentes variables. Par la suite, ces échelles ont été regroupées pour élaborer le questionnaire d'enquête. Pour ce faire, nous avons choisi des échelles de notation, déterminé

© 2020 Global Journals

l'ordre des questions et procédé au prétest du questionnaire.

iv. *Les échelles de notation*

Il s'agit ici de définir le type de modalité de réponse et le nombre de possibilités proposées aux répondants (nombre d'échelons de l'échelle). Evrard et al. (2003)[3] classent les échelles en quatre catégories à savoir:

- L'échelle verbale selon laquelle chaque catégorie de réponse est associée à un mot.
- L'échelle métrique selon laquelle les catégories sont représentées par les chiffres.
- L'échelle mixte avec les catégories extrêmes repérées verbalement et les catégories intermédiaires par les chiffres.
- L'échelle graphique avec les catégories ancrées graphiquement.

Dans notre cas, nous avons opté pour l'échelle verbale, le questionnaire étant relativement long. Cette échelle, nous l'avons préféré de type Likert, qui consiste à mesurer le degré d'accord du répondant pour une proposition pour sa simplicité d'utilisation. Pour le nombre d'échelons, nous avons choisi sept points pour deux raisons. D'abord, il s'agit d'un nombre impair ce qui nous permet d'avoir un point neutre sur le continuum (ni d'accord, ni en désaccord). Deuxièmement plus le nombre d'échelons augmente, plus les capacités cognitives, d'endurance et de concentration des répondants sont sollicitées (Colle, 2006), ce qui augmente la fiabilité des réponses fournies.

La limite de cette échelle est liée au fait qu'elle peut accentuer l'effet du halo qui survient lorsque les questions posées sous-forme d'échelles orientées dans le même sens, le répondant a tendance à répondre de la même manière. Pour pallier cette limite, nous avons formulé certains énoncés de façon négative afin d'inciter le répondant à réfléchir au sens de la question.

v. *L'ordre des questions*

Nous avons regroupé les questions dans trois catégories de variables à savoir les variables indépendantes, les variables dépendantes et la variable médiatrice. Dans chaque catégorie, nous avons rassemblé les questions en sous-groupes, chacun représentant l'ensemble des items de mesure d'un même indicateur. Ceci a été fait dans le but d'éviter que les personnes interrogées répondent à la fois aux questions liées aux variables indépendantes et aux variables dépendantes et que cela pose le problème de « common variance ».

vi. *Le prétest du questionnaire*

Pour évaluer la qualité de la formulation des différentes questions, nous avons procédé au prétest. Ce prétest s'est appliqué en deux étapes ; à la première étape, nous avons soumis le questionnaire à l'appréciation de quelques docteurs et doctorants et à la deuxième étape, nous l'avons soumis à une vingtaine d'enseignants du secondaire, un échantillon de la population cible de l'étude. Tout ceci nous a permis de vérifier la validité de contenu des construits ou la cohérence des items ; limiter le biais de formulation des questions; éviter les effets d'instrumentation liés à l'interaction entre les questions et évaluer la durée de remplissage du questionnaire. Au terme de cette opération, certaines questions ont dû être reformulées, d'autres ajoutées et d'autres tout simplement supprimées.

c) Constitution de l'échantillon et administration du questionnaire

i. *Constitution de l'échantillon*

La population cible de notre enquête est constituée par l'ensemble des enseignants du secondaire (fonctionnaires) exerçant au Cameroun, sans distinction de sexe, ni d'âge, ni de lieu de service, etc. nous avons choisi d'administrer notre questionnaire aussi bien dans les zones périphériques que dans les grandes métropoles afin d'avoir la possibilité de retrouver dans notre échantillon toutes les caractéristiques de la population cible. De même, nous avons essayé, tant que possible de parcourir la totalité sinon la plupart des régions du Cameroun dans ce même but.

ii. *L'administration du questionnaire*

Pour ce qui est de l'administration du questionnaire, nous avons combiné deux méthodes à savoir internet et questionnaire sur format papier. Nous avons d'abord commencé par internet en créant une enquête Google forms et en partageant le lien via adresses e-mail ou via Whatsapp pour ceux dont nous disposions des contacts ou sur les plates-formes d'enseignants. Mais cette approche a très tôt montré ses limites, car contrairement à ce que nous imaginions, plusieurs personnes se sont montrées réticentes au point où au terme d'un mois, une vingtaine de personnes seulement avait réagi. Ceci aurait été dû à l'exigence d'avoir premièrement un téléphone androïd et deuxièmement d'avoir une connexion de bonne qualité. Face à cette situation, nous-nous sommes sentie obligée d'imprimer le questionnaire sur format papier afin d'accélérer le processus.

iii. *L'estimation des paramètres.*

Dans le cadre de l'estimation des paramètres du modèle complet, les deux sous-ensembles sont estimés soit simultanément, soit alternativement en recourant à différents types d'algorithme:

- la méthode Lisrel (*Linear Structural Relationship*) qui repose sur l'analyse de la structure de covariance et

[3] Cité par Colle 2006

© 2020 Global Journals

utilise l'approche du maximum de vraisemblance; elle requiert la multi normalité des données,

- la méthode GLS (*Generalized Least Squares*) est moins sensible à la non normalité mais demeure très sensible à la complexité du modèle,
- les méthodes ADF (*Asymptotic Distribution Free*) et WLS (*Weighted Least Squares*) ne requièrent pas la multi normalité mais exigent des échantillons de plus de 2 500 observations,
- la méthode PLS (*Partial Least Square*) qui repose sur l'analyse de la variance et utilise l'approche des moindres carrés partiels.

Dans le cadre de cette recherche, nous insisterons sur la méthode PLS (partial least square) qui semble l'une des méthodes les plus utilisées dans la littérature après LISREL qui est la méthode que nous allons employer pour l'analyse de nos données.

iv. *La méthode PLS*

On désigne habituellement sous le nom de « méthode PLS », l'application des techniques et algorithmes de régression en moindres carrés partiels (partial least squares) à l'estimation de modèles d'équations structurelles. Une fois la spécification du modèle théorique achevée, l'estimation est réalisée de manière itérative: dans le modèle de mesure, les variables latentes sont estimées par des combinaisons linéaires de leurs indicateurs pondérés[4]. Dans le modèle structurel, les liens entre variables latentes (coefficients de régression linéaires) sont estimés par des régressions multiples entre les variables sélectionnées. L'objectif est la maximisation de la variance expliquée des variables dépendantes par les variables indépendantes, c'est-à-dire la maximisation de la covariance entre variable explicative et variable expliquée.

d) Avantages et limites de la méthode

i. *Avantages*

❖ « Une méthode simple »

La modélisation structurelle par la méthode PLS apparaît plus simple que les méthodes basées sur l'analyse des covariances, car elle permet de traiter des modèles relationnels complexes, comportant un grand nombre de variables, avec l'assurance d'obtenir une solution admissible.

❖ « Peu d'hypothèses probabilistes »

La méthode PLS ne nécessite pas la multi normalité des variables comme c'est le cas avec LISREL. Elle peut fonctionner avec des variables nominales, d'intervalle ou continues. Les contraintes de taille d'échantillon sont également plus souples: par opposition aux méthodes CBSEM, pour lesquelles un échantillon minimum de 200 observations est exigé, l'estimation par la méthode PLS peut être réalisée sur de petits échantillons. Il suffit que le nombre d'observations soit supérieur ou égal à 10 fois le nombre d'indicateurs de la variable formative la plus complexe, et/ou 10 fois le nombre de relations structurelles émanant du construit central du modèle structurel.

❖ « Aucun problème d'identification »

Le principal avantage dans le domaine de la gestion est de permettre l'estimation aisée de modèles structurels comportant à la fois des construits formatifs et réflexifs.

En dépit des avantages sus mentionnés, la méthode PLS présente quelques limites qui peuvent justifier son utilisation restreinte en sciences de gestions.

ii. *Les limites.*

Les principales sont les suivantes:

❖ La non prise en compte des erreurs de mesure

❖ L'absence d'indices d'ajustement des modèles (fit indices)

Contrairement aux modèles estimés par les méthodes de type Lisrel, les chercheurs utilisant le méthode PLS ne disposent pas d'indices d'ajustement (fit indices) permettant de juger de l'ajustement du modèle testé aux données empiriques. Ces indices sont jugés très utiles, car ils permettent à la fois de juger de l'ajustement d'un modèle considéré isolément, mais également de comparer entre eux plusieurs modèles alternatifs.

❖ L'impossibilité de traiter les modèles non récursifs

Contrairement à l'algorithme à la base de Lisrel, l'algorithme PLS, qui est fondé sur des procédures de régression multiple, ne permet pas d'estimer les modèles comportant des interactions bilatérales entre variables latentes (modèles dits non récursifs, ou modèles « en boucle »).

❖ Le problème de la consistance

L'estimation des paramètres des modèles structurels par la méthode PLS n'est qu'approximativement exacte, en raison de la non prise en compte des erreurs de mesure. Les estimations ne deviennent donc asymptotiquement correctes que sous une double condition de « consistance » (Mc Donald, 1996) : la taille de l'échantillon doit être très grande, et le nombre d'indicateurs par variable doit être également très grand. Dans la pratique, ces conditions ne sont pratiquement jamais réunies, ce qui a pour conséquence une tendance à la sous-estimation des relations structurelles et à la surestimation des contributions des indicateurs aux construits (loadings).

iii. *La méthode LISREL*

Développée par Jöreskog en 1970, Lisrel utilise un système d'équations structurelles basé sur l'estimation de la matrice de covariance. Il s'agit donc de juger la qualité d'ajustement du modèle aux données

[4] Pour plus de détails, voir Lacroux 2009, pp.6.

© 2020 Global Journals

par ses propres propriétés distributionnelles. Cette méthode permet de spécifier, estimer comparer et évaluer des modèles afin de confirmer une théorie. Lisrel est donc une méthode confirmatoire (ou « a priori ») qui nécessite un fort substrat théorique afin de penser en terme de modèles et d'hypothèses. La spécification du modèle est donc une phase cruciale dans le travail de modélisation.

e) Modélisation

La figure ci-dessous représente un exemple de modèle structurel de la covariance (Lisrel).

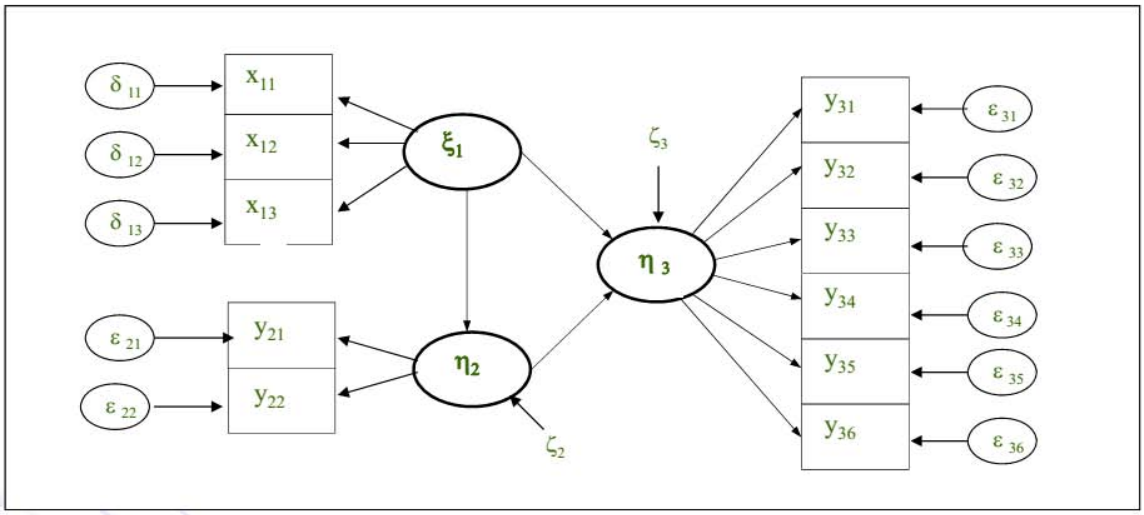

$$\eta_{(m\,x\,1)} = B_{(m\,x\,m)} * \eta_{(m\,x\,1)} + \Gamma_{(m\,x\,n)} * \xi_{(n\,x\,1)} + \zeta_{(m\,x\,1)}$$

Eq. du modèle structurel

$$y_{(p\,x\,1)} = \Lambda_{y(p\,x\,m)} * \eta_{(m\,x\,1)} + \varepsilon_{(p\,x\,1)}$$

$$x_{(q\,x\,1)} = \Lambda_{X(q\,x\,n)} * \xi_{(n\,x\,1)} + \delta_{(q\,x\,1)}$$

Eq. du modèle de mesure

Figure 1: Exemple de modèle structurel de la covariance (Jakobowicz, 2013).

À partir du modèle théorique construit a priori, on obtient une matrice de covariance théorique Σ comportant les coefficients de corrélation attendus. A partir des données réelles, on construit la matrice de covariance observée (ou empirique) S qui comporte les coefficients de corrélation de la relation entre deux variables. Les paramètres du modèle seront estimés de manière itérative de sorte à minimiser la différence entre les deux matrices S et Σ à partir des équations suivantes:

$$\eta_{(m\,x\,1)} = B_{(m\,x\,m)} * \eta_{(m\,x\,1)} + \Gamma_{(m\,x\,n)} * \xi_{(n\,x\,1)} + \zeta_{(m\,x\,1)}$$

$$y_{(p\,x\,1)} = \Lambda_{y(p\,x\,m)} * \eta_{(m\,x\,1)} + \varepsilon_{(p\,x\,1)}$$

$$x_{(q\,x\,1)} = \Lambda_{X(q\,x\,n)} * \xi_{(n\,x\,1)} + \delta_{(q\,x\,1)}$$

On va tenter d'obtenir une matrice de covariance à partir de ce modèle. Cette matrice pourra donc s'écrire de la façon suivante:

$$C = \begin{pmatrix} \mathrm{cov}(x) & \mathrm{cov}(x,y) \\ \mathrm{cov}(y,x) & \mathrm{cov}(y) \end{pmatrix} = \begin{pmatrix} (I-B)^{-1}(\Gamma\Phi\Gamma' + \Psi) & (I-B)^{-1}\Gamma\Phi \\ \Phi\Gamma'(I-B)^{-1} & \Phi \end{pmatrix}$$

© 2020 Global Journals

Avec:

- p+q= Nombre de variables manifestes
- n= Nombre d'observations
- Σ= Matrice de covariance au niveau de la population
- S= Matrice des covariances observées
- C= Matrice des covariances obtenue grâce au modèle
- Φ= Matrice de covariance de ξ
- Ψ= Matrice de covariance de ζ

La méthode LISREL consiste en l'utilisation d'un estimateur afin de rendre la matrice de covariance calculée à partir du modèle (C) le plus proche possible de la matrice de covariance observée(S) en terme de maximum de vraisemblance.

f) Prérequis à l'utilisation de la méthode Lisrel

L'utilisation de cette méthode suppose:

- la linéarité du modèle.
- l'indépendance des observations.
- la normalité multivariée des données.
- l'unidimensionnalité des blocs de variables.
- un nombre d'observations minimum de 5 par paramètre à estimer; en pratique, 200 observations minimum sont recommandées (Roussel et al., 2002). Les deux conditions les plus difficiles à respecter sont généralement la normalité des données et la taille de l'échantillon.

g) Qualité d'ajustement du modèle

L'évaluation de la qualité d'ajustement du modèle aux données est faite au moyen de différents indicateurs dont les plus utilisés sont:

- *le test du χ2:* si le modèle étudié est exact alors (n-1)F= χ2(DF) avec DF le degré de liberté égal au nombre de covariances moins le nombre de paramètres. Le modèle est considéré comme bon si χ2/DF<=3 et p-valeur <=0.05,
- *GFI (Goodness of Fit Index):* cet indice donne la proportion d'information expliquée par la matrice S; une valeur supérieure ou égale à 0.9 indique une bonne qualité du modèle,
- *RMSEA (Root Mean Square Error of Approximation)*: cet indice calcule la différence entre la matrice de covariances obtenue et celle de la population globale.

$$RMSEA = \sqrt{\frac{F_0}{DF}}$$

Où $F_{ML} = \log|\mathbf{C}| + tr\left(\Sigma\mathbf{C}^{-1}\right) - \log|\Sigma| - (p+q)$

En pratique, on l'estime avec :

$$RMSEA_{estimated} = \sqrt{\frac{F}{DF} - \frac{1}{n-1}}$$

On l'accepte en dessous de 0.08 en général, un intervalle de confiance peut être obtenu.

- *NNFI ou indice de Tucker-Lewis:* il permet de mesurer l'augmentation de la qualité d'ajustement quand on passe du modèle de référence (null model) au modèle étudié. On acceptera le modèle pour une valeur supérieure ou égale à 0.95
- *CFI (Comparative Fit Index):* cet indice permet de comparer le modèle étudié au modèle d'indépendance complète. On acceptera le modèle pour une valeur supérieure ou égale à 0.9.

IV. Presentation des Resultats

a) Resultats De L'etude Qualitative Et Commentaires.

Tout au long de notre étude qualitative, nous avons pu réaliser un total de quinze entretiens. Les caractéristiques de cet échantillon seront présentées ci-dessous.

i. *Caractéristiques de l'échantillon.*

L'objectif de cette étude exploratoire ne visant pas à tester un modèle, mais de mettre en évidence les différents avis des enseignants au sujet d'une application de la GRH à la carte à leur traitement et les différents choix dont ils souhaiteraient avoir, nous avons opté pour un échantillon de convenance. À en croire Igalens et Roussel (1998), *« une recherche exploratoire comporte souvent une collecte des données effectuée sur un échantillon de convenance ou de commodité »*. Compte tenu des emplois de temps chargés des répondants, nous-nous sommes rendu dans les lieux de

© 2020 Global Journals

service par plusieurs fois afin de prendre des rendez-vous. Les entretiens se réalisaient dans la plupart des cas pendant les heures de pause ou à des heures creuses, selon la volonté du répondant sollicité. Les interviewés ont été répartis suivant l'âge, la fonction, le sexe, le statut matrimonial, l'ancienneté, le nombre d'enfants en charge.

ii. *Répartition suivant l'âge et la fonction.*

Le tableau suivant ressort la répartition de cet échantillon suivant le critère âge et la fonction.

Tableau 1: Caractéristique de l'échantillon de l'étude qualitative exploratoire selon l'âge des répondants et la fonction.

		Tranche d'âge				Total	Pourcentage
Fonction	sexe	25-35	36-45	46-55	>55		
Enseignant de salle	Masculin	3	2	1	1	7	46.67
	Féminin	3	0	1	0	4	26.67
Membre de l'administration	Masculin	0	0	1	1	2	13.33
	Féminin	0	1	1	0	2	13.33
Total		6	3	4	2	15	100
Pourcentage		40	20	26.67	13.33	100	

De ce tableau, il en ressort que notre échantillon comporte deux catégories d'enseignants selon leurs fonctions à savoir les enseignants de salles dont l'action se limite à la salle de classe représentant 73.34% (soit 46.67% de sexe masculin et 26.67 de sexe féminin) de la taille de l'échantillon et les membres de l'administration dont le quotidien est partagé entre les tâches administratives et quelques heures de cours en classe (26.66%), soit 13.33% de sexe masculin et 13.33% de sexe féminin. De toutes les personnes interviewées, celles ayant un âge compris entre 25 et 30 ans représentent 40% de la taille de l'échantillon et celles ayant un âge compris entre 36 et 45 ans 20% contre 26.67% et 13.33% pour celles dont l'âge est compris entre 46 et 55ans et plus de 55ans respectivement.

iii. *Inventaire des choix proposés par les interviewés.*

Ici, il convient de préciser que les choix évoqués par les enseignants sont ceux qu'ils souhaiteraient disposer et non ceux dont ils bénéficient déjà, l'enseignant n'étant qu'un « réceptacle » si l'on s'en tient aux propos de cet enseignant qui affirme « je ne suis pas satisfait de la façon dont je suis traité en tant qu'enseignant à cause de la privation de toute liberté, tout est assigné; l'enseignant est tout simplement un réceptacle ». En effet, le seul aspect de la personnalisation qui soit visible dans la gestion des enseignants est le choix de la discipline à enseigner. Cependant, il est aussi prévu des possibilités de choix en matière de mobilité géographique (choix de la région du service, la possibilité de regroupement familial et la permutation) et les heures et jours de travail (au travers des désidératas) bien que ceci ne soit pas toujours réel dans la pratique. cela est perceptible dans les propos de cet enseignant: *« l'enseignant a la possibilité de choisir la matière qu'il enseigne, sa région d'affectation, ses jours et heures de cours sur la base des désidératas. Si ces choix pouvaient être respectés ce serait une bonne chose. Mais régulièrement ils ne le sont pas surtout en matière d'affectation et de temps de travail ».*

Les choix cités par les enseignants sont les suivants:

- Choix relatifs à la rémunération
- La mobilité géographique
- La matière à enseigner
- La charge de travail
- Choix en matière de jours et d'horaires de travail
- Choix du lieu de service
- Choix d'exercice ou non des fonctions administratives
- Choix en matière des heures supplémentaires rémunérées
- Choix relatif à la durée du séjour dans un lieu de service
- Choix relatifs à la carrière
- Choix relatif aux conditions de recrutement

Les enseignants affirment qu'ils disposent de quelques choix dans leur profession bien que ceux-ci ne soient pas respectés dans la réalité. Ces choix concernent la discipline à enseigner, la région du service, la mobilité géographique et les temps de travail. Ils estiment par ailleurs que si ces choix étaient respectés ils en seraient satisfaits: *« Si ces choix pouvaient être respectés ce serait une bonne chose »,* dit un enseignant. Ils respecteraient les engagements pris s'ils avaient choisi puisque chacun choisirait ce qui correspond à ses attentes: *« L'offre des choix ne serait qu'une bonne chose car chacun va choisir, contracter en fonction de ce qu'il veut ou de ce qu'il souhaite. Celui qui a choisi est content de respecter son choix, il s'attribue la contrainte de respecter ses choix puisqu'il n'a pas été obligé dès le départ ».* D'aucuns pensent même que ces choix doivent constituer une sorte de barrière à l'entrée des enseignants opportunistes: *« je serais entièrement d'accord que l'on offre ces possibilités de choix aux enseignants surtout si cela doit être fait dès le processus de sélection… Les*

© 2020 Global Journals

enseignants qui ne viennent que pour le matricule, si les conditions ne les arrangent pas, vont désister ».

Notons par ailleurs que parmi ces choix certains coïncident avec ceux présents dans la littérature (rémunération, carrière, temps de travail, mobilité géographique). De nouveaux choix qui seraient propres à la profession d'enseignant émergent cependant; il s'agit de la charge de travail, lieu de service, matière à enseigner, exercice des fonctions administratives, heures supplémentaires rémunérées, durée du séjour dans un lieu de service, conditions de recrutement. Dans le prochain paragraphe, nous allons analyser l'impact probable de l'offre des choix aux enseignants sur les attitudes de ces derniers au travail.

iv. *Influence probable de ces choix sur les attitudes des enseignants au travail*

Les enseignants interviewés estiment qu'en leur offrant la possibilité de choisir ils se sentiraient dignement traités ce qui renforcerait les attitudes positives vis-à-vis de leur profession. *« Si je travaille dans un lieu que j'ai choisi, je serais tenue de respecter tous mes engagements puisque dès le départ j'avais le choix entre postuler et laisser »* ; telle est la réponse d'une enseignante à la question de savoir si l'offre des choix pourrait avoir un impact sur son comportement vis-à-vis du travail. À cette même question un autre de sexe masculin ajoute: *« Bien sûr. Si chacun doit être récompensé en fonction de ses efforts et sacrifices, c'est plutôt bien. Cela pourrait pousser à rester davantage dans le métier et même dans un lieu de service quelconque »*. Toutes les autres réponses à cette semblent aller dans ce même sens. C'est le cas de cet autre enseignant qui déclare : *« Bien entendu, si je sais qu'en faisant telle chose ou en me comportant de telle manière je pourrais être récompensé ou distingué, pourquoi pas redoubler d'efforts ? »*. Un autre corrobore en ces termes: *« cela va réduire l'absentéisme, augmenter la volonté de travailler, le désir de servir et même la performance des enseignants »* et l'autre ajoute: *« ce serait bénéfique pour tous dans la mesure où on n'aurait plus des enseignants qui disparaissent à tout moment »*.

Aussi avons-nous cherché à comprendre l'impact possible de l'offre des choix sur l'intention de départ volontaire des enseignants. La question qui a été posée est celle de savoir si un enseignant serait en mesure de quitter sa profession pour une autre qui lui offre des possibilités de choix et les enseignants répondent: *« je pourrais quitter l'enseignement pour une autre profession qui m'offre des choix à condition que ces choix me permettent de bénéficier d'une rémunération plus consistante »* dit l'un. L'autre continue en disant: *« oui il est possible que je quitte l'enseignement pour une autre profession qui m'offre des choix puis que j'y mettrais mes idées en valeur. Je serais plus à l'aise de travailler où on tient compte de mes points de vue ».* Une enseignante corrobore en disant: *« je peux quitter l'enseignement pour un autre corps qui m'offre des choix puisque je m'y sentirais traitée avec respect et liberté »*.Pour terminer, un autre déclare: *« comment ne pas ? si je dois être consulté pour toute décision me concernant dans le cadre de mon travail, dites-moi qui refuserait cela ».*

b) Resultats De L'etude Quantitative Et Commentaires.

i. *Vérification de la validité et de la fiabilité de l'échelle de mesure.*

Tableau 2: Validité et fiabilité de l'échelle de mesure

Indices	Choix relatifs à la carrière	Choix relatifs aux conditions de recrutement
Test de fiabilité interne	0,612	0,629
Test de validité convergente	0,586	0,678
Test de validité discriminante:	$\rho_{vc1et}\,\rho_{vc2} >$ 0, 1521	

Les coefficients étant tous supérieurs à 0,5 , on peut conclure que l'échelle de mesure issu du modèle corrélé de l'ACP reste la meilleure pour mesurer la GRH à la carte. Cette échelle se présente comme ci-dessous (tableau 3).

Tableau 3: Echelle confirmée pour la mesure de la GRH à la carte.

Facteur 1 (choix relatifs à la carrière)	
choicar4	J'aimerais que l'on m'offre des espaces de choix en matière de mobilité (horizontale et verticale).
choicar3	Je souhaiterais avoir un mot à dire en ce qui concerne mon évolution de carrière.
choicar5	J'aimerais pouvoir bénéficier d'une mobilité géographique si je le souhaite.
choicar1	Je préfèrerais que l'on m'offre des espaces de choix en ce qui concerne ma carrière.
choicar9	Je choisirais de prendre ma retraite plus tôt si l'occasion m'était donnée.
Facteur 2 (choix relatifs aux conditions de recrutement 1)	
choiRcr3	L'enseignant devrait choisir son nombre d'année de service et sa date de retraite dès le dossier de candidature au concours d'entrée à l'ENS

© 2020 Global Journals

choiRcr9	Dans l'ensemble, l'enseignant postulant devrait recevoir le maximum informations relatives à la profession et ses exigences
Facteur 3 (choix relatifs aux conditions de recrutement 2)	
choiRcr4	La fiche de renseignement relative au concours d'entrée à l'ENS devrait préciser le nombre de places disponibles par discipline et par région, voire par département
choiRcr5	Chaque candidat au concours devrait aller en compétition non seulement avec les autres candidats qui sollicitent la même filière, mais aussi et surtout ceux qui sollicitent la même région ou le même département comme lieu de service.

Ainsi, nous avons par cette analyse confirmatoire qui vient de s'achever passé en revue tous les instruments de mesure de notre recherche. Synthèse des résultats obtenus sera présentée dans le tableau suivant.

Tableau 4: Synthèse de l'analyse confirmatoire des échelles de mesure.

Intitulée de l'échelle	Nombre d'items	GFI	AGFI	RMSEA	TLI	CFI	Fiabilité	Validité
Sentiment de justice (2 dimensions)								
Justice distributive	4	0,980	0,958	0,053	0,965	0,978	0,766	0,549
Justice procédurale	3							
Implication organisationnelle (2 dimensions)								
Implication calculée	3	0,980	0,940	0,090	0,911	0,956	0,692	0,650
Implication affective	2							
Intention de quitter (1 dimension)	7	0,970	0,940	0,076	0,952	0,968	0,779	0,787
GRH à la carte (2 dimensions)								
Choix relatifs à la carrière	5	0,988	0,968	0,047	0,987	0,975	0,612	0,586
Choix relatifs aux conditions de recrutement	4							

Après avoir vérifié la fiabilité et la validité de nos différents instruments de mesure, nous pourrions désormais les utiliser pour tester notre modèle de recherche. C'est ce qui fera l'objet du paragraphe suivant.

ii. *Test de l'influence directe du désir de choisir sur la fidélité des enseignants*

Conformément aux quatre étapes proposées par Baron et Kenny, la première étape consiste à tester les relations directes entre les variables indépendantes et les variables dépendantes.

iii. *Test de l'influence des choix relatifs à la carrière sur la fidélité des enseignants*

Pour les choix relatifs à la carrière, nous avons testé un premier modèle avec toutes variables à expliquer à savoir l'implication vis-à-vis de la profession (affective et calculée) et l'intention de quitter la profession tel qu'il se manifeste à travers la figure ci-contre.

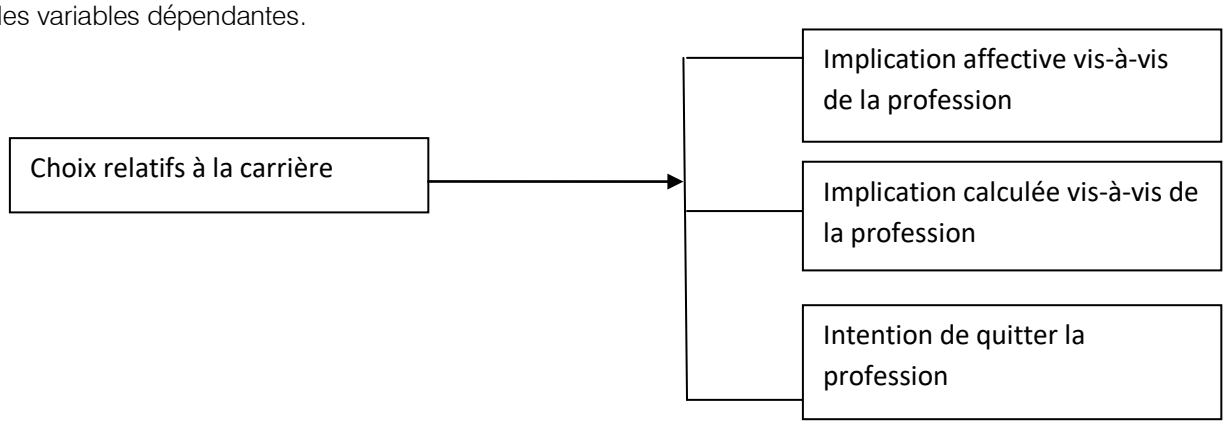

Figure 2: Modèle d'analyse de l'influence des choix relatifs à la carrière sur la fidélité des enseignants.

© 2020 Global Journals

iv. *Modèle initial avec toutes les dimensions de la fidélité*

❖ Étude de la significativité des corrélations.

Cependant, les résultats de ce premier modèle ont révélé une corrélation non significative entre les choix relatifs à la carrière et l'implication affective avec un R^2 nul malgré l'absence de variances négatives et de bons indices d'ajustement du modèle aux données. La figure 3 et le tableau 5 ci-dessous en sont des illustrations telles que sorties de l'ordinateur.

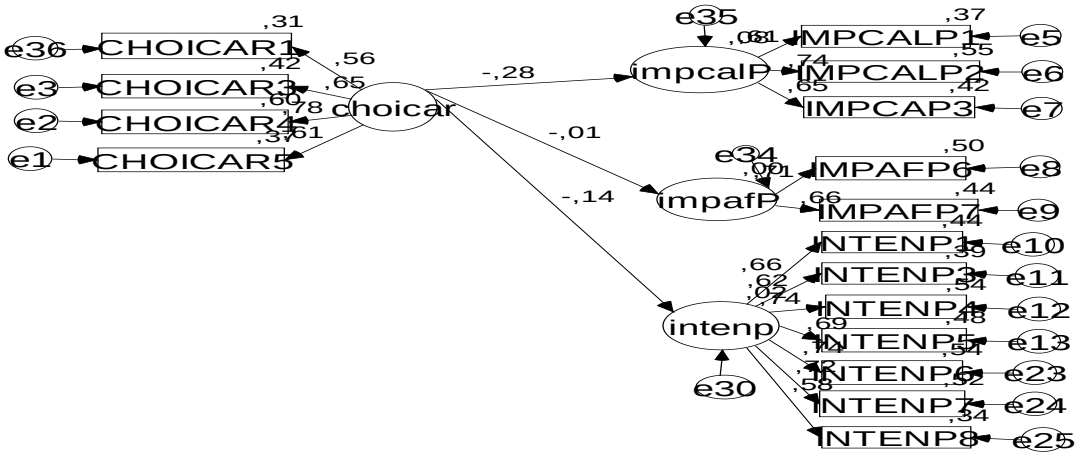

Figure 3: Résultats du test du modèle initial de l'influence de la demande de personnalisation de la gestion de carrière sur la fidélité des enseignants vis-à-vis de la profession.

Tableau 5: Significativité des relations

	Implication affective				Implication calculée				Intention de départ			
	Estim.	S.E	C.R	P	Estim.	S.E	C.R	P	Estim.	S.E	C.R	P
choicar	-0,018	0,091	-0,194	0,846	-0,471	0,122	-3,874	0,000	-0,235	0,102	2,296	0,022
R^2	0,000				0,177				0,120			
Standardized regression weights	-0,014				-0,278				-0,141			

NB: Les chiffres en gras représentent les relations significatives.

❖ Vérification de l'ajustement.

Tableau 6: Indices d'ajustement

X^2/ddl	GFI	AGFI	RMSEA	TLI	CFI	AIC
2,408	0,926	0,903	0,058	0,908	0,921	313,983

Forte de cela, nous envisageons un nouveau modèle sans l'implication affective.

v. *Modèle sans implication affective.*

Les résultats de cette seconde analyse sont exprimés par la figure 4 et les deux tableaux qui suivent.

© 2020 Global Journals

❖ Significativité des corrélations.

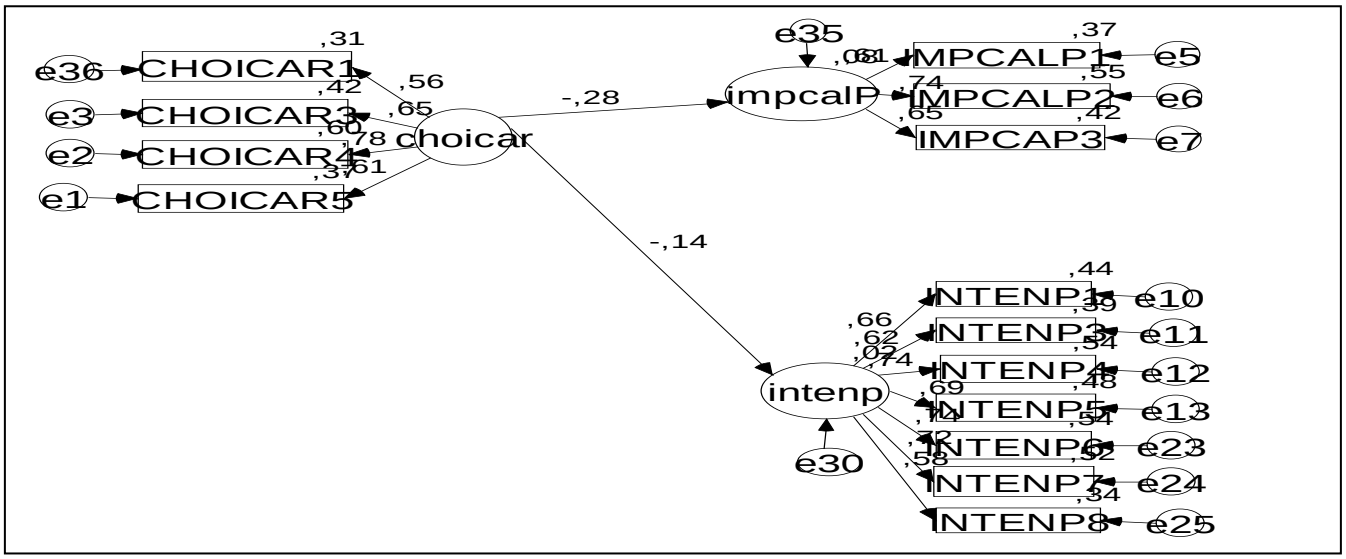

Figure 4.1: Modèle d'analyse de l'impliction sans l'implication affective.

Le tableau suivant présente la significativité des différentes relations.

Tableau 7: Significativité des relations.

	Implication calculée				Intention de départ			
	Estim.	S.E	C.R	P	Estim.	S.E	C.R	P
choicar	-0,472	0,122	-3,877	0,000	-0,234	0,102	2,282	0,022
R^2	0,177				0,120			
Standardized regression weights	-0,278				-0,140			

Le tableau 7 ci-dessus présent les tests t de Student significatifs entre le désir de disposer des choix en matière de carrière et l'implication calculée (au seuil de signification de 1%) d'une part et l'intention de départ volontaire (au seuil de signification de 5%) d'autre part. cela signifie que le désir de personnalisation de la gestion de carrière exprimé par les enseignants évolue en sens inverse avec l'implication calculée et l'intention de quitter la profession. Autrement dit, plus le désir de personnalisation de la carrière se fait sentir, moins est son implication calculée vis-à-vis de sa profession.

De même, malgré l'expression d'un désir de personnalisation de la carrière, les enseignants manifestent une intention moindre de quitter la profession. Pourtant, notre étude exploratoire révèle que les enseignants sont prêts à abandonner l'enseignement pour un autre métier qui leur offrirait des possibilités de choisir. Cette situation traduit donc tout sauf la fidélité puis que cette intention de rester est accompagnée d'une diminution de l'implication. Il y a donc une insatisfaction, mais qui n'entraîne guère une intention d'abandonner la profession. Ceci peut s'expliquer d'une part par le contexte actuel marqué par un manque d'opportunités et le chômage. De plus à en croire Meyssonnier (2005), un salarié peut s'attacher à son entreprise à long terme soit par ce qu'il le veut soit par ce qu'il est obligé. Il y a donc ici trois possibilités:

- Soit il s'agit de la rétention qui résulte d'un attachement stimulé principalement par un raisonnement ou un calcul personnel de la part de l'enseignant. C'est-à-dire que l'enseignant désire rester dans la profession pour les avantages qu'il y tire.
- Soit il s'agit du dévouement qui correspond à une sorte de conscience professionnelle de l'enseignant. Ce dernier reste dans la profession par ce qu'il perçoit des barrières au changement, barrières perçues par l'enseignant comme étant importantes pour lui. L'engagement décennal[5] pris en début de carrière chez les enseignants du secondaire en est un exemple.
- Soit il s'agit tout simplement de l'inertie selon laquelle l'enseignant ne ressent ni liberté de choix à maintenir la relation, ni une forte adhésion aux valeurs de l'enseignement. Il semble s'y être attaché au fil du temps par habitude et par facilité. Il s'agit dans ce cas de ce que l'on pourrait qualifier

[5] L'entrée dans le métier d'enseignant (du secondaire) au Cameroun est sanctionnée par un engagement à servir la nation au mois pendant dix ans.

© 2020 Global Journals

de « passivité » car l'enseignant se maintient dans sa profession tout simplement parce que tout changement suppose des efforts.

Cette situation est également assimilable à celui que Maugeri (2008) qualifie d' « exploiteur heureux » qui malgré une insatisfaction ressentie, fait voir à tout le monde comment il est satisfait de son sort au sein de l'organisation ; son travail l'intéresse pour les avantages qu'il en tire, il exploite ceux qui le paient. Il réussit à s'en tirer à l'aide de son attitude positive car il sait manipuler ceux qui l'entourent.

Il peut également s'agir d'un « exploiteur malheureux ». Celui-ci s'en sort généralement très mal car non seulement il ne produit rien, mais en plus il critique constamment. Il est insatisfait de sa situation et réduit ainsi ses efforts au minimum. Il reste au sein de l'organisation par manque d'opportunités ou par facilité. En plus, le matricule qui accompagne l'entrée dans la profession d'enseignant procure à l'enseignant une certaine sécurité de l'emploi, un emploi à vie qu'il n'aura pas toujours la chance d'avoir s'il venait à quitter l'enseignement.

Le tableau suivant nous présente les indices d'ajustement du modèle aux données.

❖ Mesure de l'ajustement.

Tableau 8: Indices d'ajustement du modèle

X^2/ddl	GFI	AGFI	RMSEA	TLI	CFI	AIC
1,856;	0,954	0,935	0,046	0,953	0,961	199,195

Ce modèle semble mieux s'ajuster aux données dans la mesure où non seulement il présente de bons indices d'ajustement, mais aussi son AIC est inférieur à celui du modèle initial.

vi. *Modèle du test de l'impact des choix relatifs aux conditions de recrutement sur la fidélité des enseignants*

Initialement, nous cherchions à tester le modèle traduit par la figure suivante.

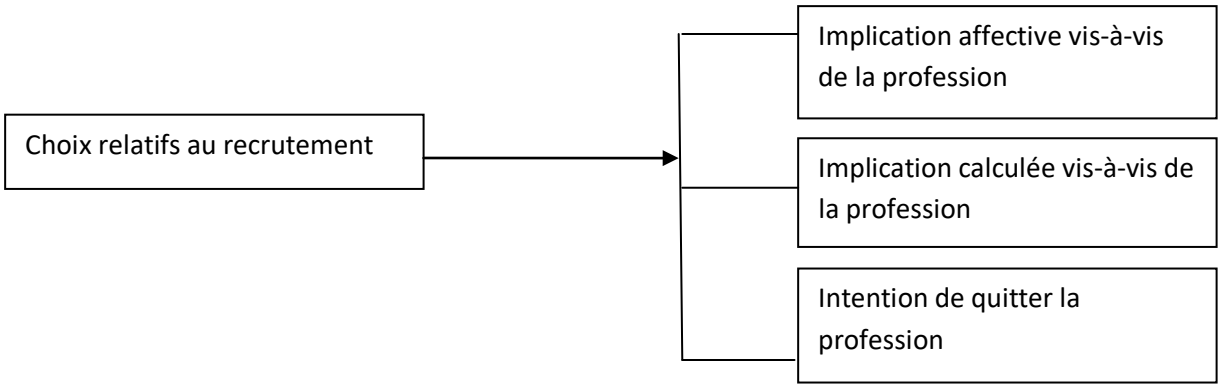

Figure 5: Modèle d'analyse de l'influence des choix relatifs aux conditions de recrutement sur la fidélité des enseignants.

Cependant, comme dans le cas précédent, les sorties d'ordinateur représentées à travers la figure et les tableaux qui suivent nous ont poussé à recourir à un nouveau modèle sans l'implication affective ; pour les mêmes raisons que précédemment.

© 2020 Global Journals

vii. Modèle initial avec toutes les dimensions de la fidélité.

❖ Étude de la significativité des relations.

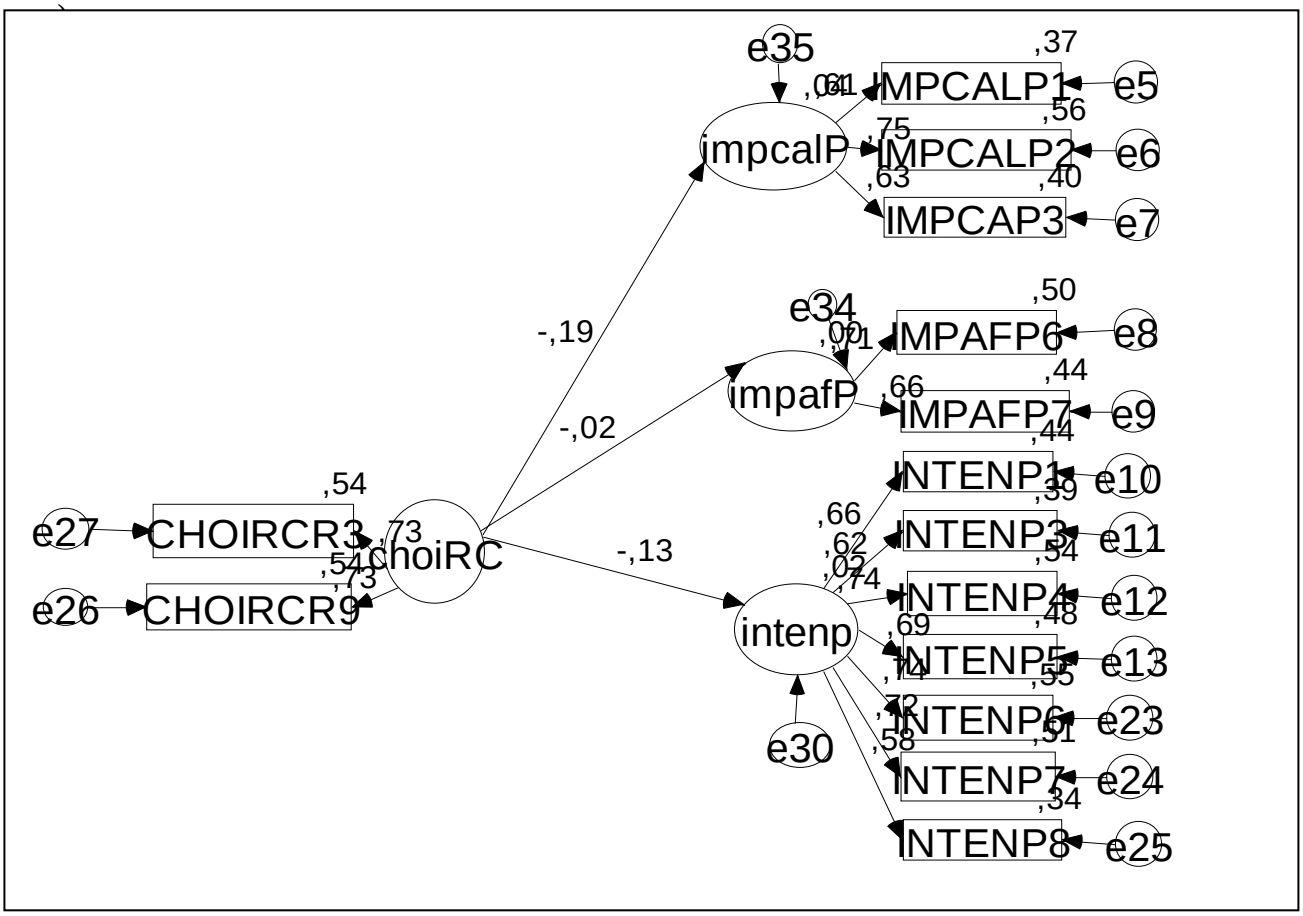

Figure 6: Modèle d'étude de l'impact du désir de personnalisation du recrutement sur la fidélité des enseignants vis-à-vis de leur profession.

Tableau 9: Significativité des relations.

	Implication affective				Implication calculée				Intention de départ			
	Estim.	S.E	C.R	P	Estim.	S.E	C.R	P	Estim.	S.E	C.R	P
choiRc	-0,022	0,078	-0,286	0,775	-0,264	0,108	-2,441	0,015	-0,170	0,091	-1,871	0,061
R^2	0,000				0,136				0,216			
Standardized regression weights	-0,021				-0,189				-0,125			

De ce tableau, il en ressort que la variable « implication affective » affiche une probabilité supérieure au seuil de signification et un R^2 nul, ce qui ne fait pas bon signe. On peut alors conclure qu'il n'existe pas de lien entre le désir de personnalisation exprimé par les enseignants et l'implication affective vis-à-vis de la profession d'enseignant. Autrement dit ce n'est pas le fait de personnaliser la gestion de carrière qui ferait aimer le métier d'enseignant.

❖ Vérification de l'ajustement du modèle.

Les indices d'ajustement du modèle consignés dans l'autre tableau qui suit vont fournir plus d'amples informations.

Tableau 10: Indices d'ajustement du modèle

X^2/ddl	GFI	AGFI	RMSEA	TLI	CFI	AIC
2,920	0,926	0,897	0,068	0,892	0,906	279,956

© 2020 Global Journals

Comme on peut le constater à partir du tableau qui précède, ce modèle présente deux indices d'ajustement qui n'atteignent pas le minimum requis (AGFI et TLI inférieur à 0,9). Ceci nous fait envisager un nouveau modèle dans lequel l'implication affective est exclue.

viii. *Modèle sans l'implication affective.*

❖ Étude de la significativité des relations.

L'analyse de la significativité des différentes relations exprimées par le modèle sera faite à partir de la figure 7 et du tableau 11 ci-contre.

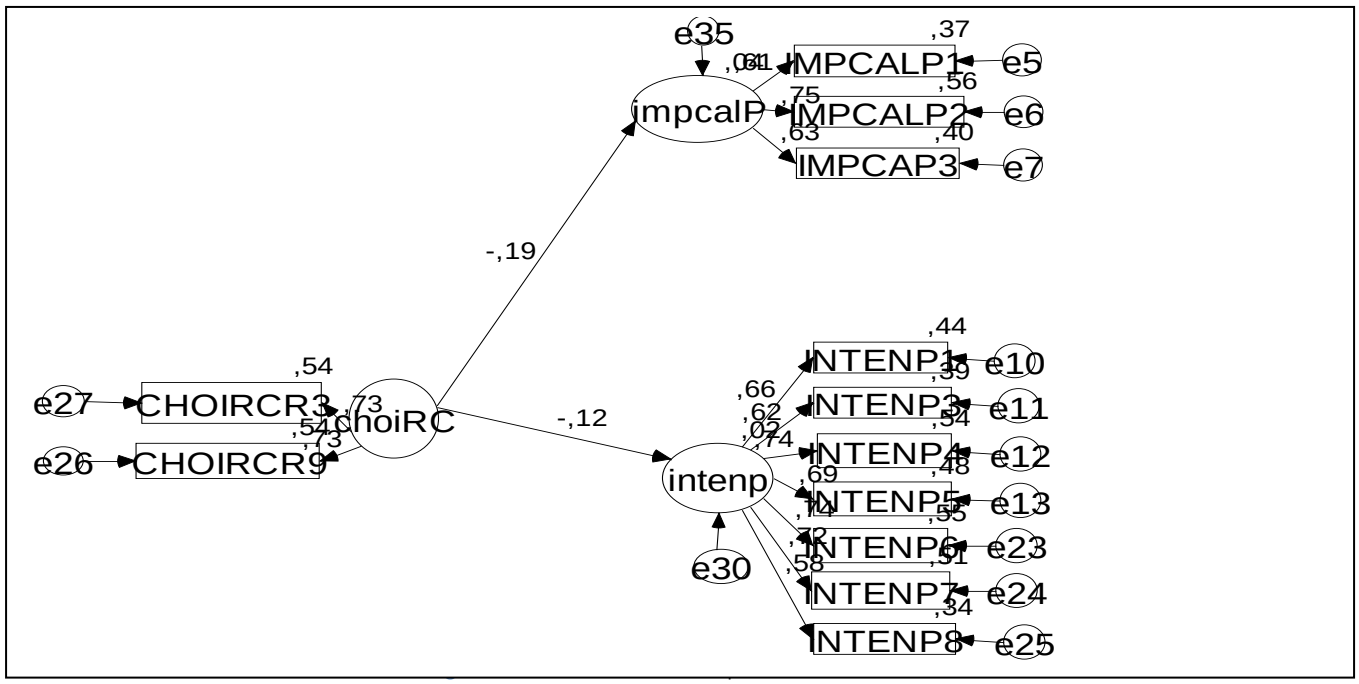

Le tableau suivant ressort la significativité des résultats issus de ce modèle.

Tableau 11: Significativité des résultats.

	Implication calculée				Intention de départ			
	Estim.	S.E	C.R	P	Estim.	S.E	C.R	P
choiCR	-0,265	0,108	-2,445	0,014	-0,168	0,091	-1,846	0,065
R^2	0,136				0,215			
Standardized regression weights	-0,190				-0,123			

Comparé au précédent, ce second modèle semble meilleur dans la mesure où il présente non seulement des relations significatives, mais aussi de bons indices d'ajustement (confer tableau suivant). On y observe des t de Student significatifs respectivement aux seuils de 5% pour l'implication calculée et de 10% pour l'intention de quitter l'enseignement. Le signe (-) devant les coefficients de corrélation indique une relation inverse entre le désir de choisir les conditions de recrutement et l'implication affective d'une part et l'intention d'abandonner l'enseignement d'autre part. Ceci veut dire que plus le désir de personnalisation du recrutement se fait sentir aux enseignants, plus leur implication calculée diminue. Mais comme dans le cas précédent, l'intention de quitter la profession diminue. Les raisons de cette diminution de l'intention de quitter l'enseignement sont les mêmes que précédemment.

❖ Qualité d'ajustement du modèle.

Le tableau qui suit va nous fournir plus de renseignement sur la qualité d'ajustement du modèle aux données.

Tableau 12: Indices d'ajustement

X^2/ddl	GFI	AGFI	RMSEA	TLI	CFI	AIC
2,265	0,955	0,932	0,055	0,942	0,942	169,767

© 2020 Global Journals

On constate par ce tableau que le modèle s'ajuste bel et bien aux données car tous les indices de la qualité de l'ajustement sont valides.

V. Conclusion

Parvenue au terme de cette deuxième partie de notre thèse portant sur les analyses empiriques, nous pouvons dit sans hésitation que les différents objectifs qui lui ont été assignés sont atteints. Il était question pour nous de vérifier l'existence réelle d'une demande de personnalisation de la GRH exprimée par les enseignants du secondaire en contexte camerounais et de montrer l'impact d'une telle demande sur la fidélité de ces derniers.

Pour ce faire, à partir d'une étude qualitative exploratoire conduite sur la base d'un guide d'entretien exploité sur un échantillon de 15 enseignants, nous avons pu mettre en évidence, non seulement les avis des enseignants quant à une gestion personnalisée de leur personnel et son impact sur leur fidélité ; mais aussi les principaux axes de la personnalisation pouvant être pris en considération dans la gestion dudit personnel. Enfin de compte, deux axes de la personnalisation ont retenu notre attention : l'offre des choix en matière de carrière et en matière de conditions de recrutement. Ces deux axes ont été explorés dans les études quantitatives sur la base d'un questionnaire administré sur 414 enseignants en vue de mettre en relief leurs différents impacts sur la fidélité des enseignants dans le cadre d'un lien direct d'une part et d'un lien médiatisé par les perceptions d'injustice d'autre part. Pour ces études quantitatives, la modélisation en équations structurelles a servi de cadre analytique.

Les résultats de cette seconde étude ont révélé l'existence d'un lien direct entre une demande de personnalisation exprimée par les enseignants et leur fidélité vis-à-vis de leur profession. Ceci dit, nous avons constaté que l'absence de la possibilité pour les enseignants d'effectuer un certain nombre de choix en ce qui concerne la gestion de leur carrière impacte négativement leur implication calculée vis-à-vis de leur profession. Ce résultat est conforme à ce qui affirmé dans la littérature, notamment dans l'étude de Colle (2006) lorsqu'il montre qu'en donnant au salarié la possibilité de choisir, ce dernier ressent un sentiment d'autodétermination, sentiment qui agit favorablement sur sa fidélité au travail. Par contre, contrairement à ce qui a été démontré dans la littérature, nous avons constaté certes un lien direct entre l'absence de possibilité de choisir en matière de gestion de carrières et l'intention de quitter la profession, mais ces deux variables évoluent dans le même sens. Il s'agit ici d'un cas atypique dans la mesure où on se serait attendu à ce que ces deux variables évoluent en sens contraire. Ceci peut se justifier par la sécurité de l'emploi que procure le statut d'enseignant fonctionnaire ou par le fait que l'employé se trouve dans une situation où il est difficile pour lui d'obtenir un autre emploi qui lui procure les mêmes avantages. Il n'est donc point question de fidélité, mais de retention.

La même thématique pourrait être abordée dans un travail ultérieur en y incluant les autres possibilités de choix soulevées par les enseignants lors des entretiens afin de mesurer la contribution de tels choix dans l'amélioration des résultats obtenus dans ce travail.

References Bibliographiques

1. Ajountimba, L. (2006) Stratégies d'amélioration de la gestion des enseignants au Cameroun.
2. Ajzen I. (1987). The theory of Planned Behavior. *Organizational Behavior and Human Decision Processes,* vol. 30, pp.179-211.
3. Bergeron L. (2007). satisfaction, motivation et performance au travail.
4. Bouchikhi H. & Kimberly J.R. (1999), "l'entreprise à la carte: un nouveau paradigme de gestion pour le XXIe siècle", *Revue Internationale De Gestion*, vol 24, n°3, pp.114-124.
5. Colle, R. (2006). L'influence de la GRH à la carte sur la fidélite des salariés: le rôle du sentiment d'auto-determination. Thèse de Doctorat en Sciences de Gestion, Université Paul Césanne, Aix Marseille III.
6. Dion D., Paquerot M. et Sueur I. (1986), "la fidélisation des partenaires: enjeux stratégiques et variables d'action", *17ème congrès de l'Association Française de Marketing (AFM)*, Deauville.
7. Greenberg J. (1987), "Organizational justice: yesterday, today and tomorrow", *Journal of Management*, vol.16, pp 209-216.
8. Greenhaus J.H. (1971), "Sources of conflict between work and family roles", *Academy of Management Review*, vol.10, pp 76-88.
9. Jakobowicz, E. (2013). les modèles d'équations structurelles à variables latentes.
10. Levy-Leboyer C. (2006), *Remotiver au travail: développer l'imlication de ses collaborateurs*, éditions d'Organisations, Paris.
11. Maingari D. (1997), La professionnalisation de l'enseignements au cameroun, des sources aux fins. *Recherche & Formation*.
12. Meyssonnier R. (2006), "Les sources d'attachement à l'entreprise, du point de vue du salarié: l'exemple des ingénieurs". *Revue de Gestion des Ressources Humaines*, n°60, Avril-Mai-Juin, pp. 48-78.
13. Mobley W.H. (1977), "Intermediate linkage in the relationship between job satisfaction and employee turnover", *Jounal of Applied Psychology*, vol 62, pp 237-240.
14. Mobley W.H., Griffeth R., Hand H.H. & Meglino B.M. (1979), "Review and conceptual analysis of the

© 2020 Global Journals

employee turnover process", *Psychology Bulletin*, vol 86, n°3, pp 493-522.
15. Peretti J.M. (2005), Ressources Humaines et gestion des personnes, Vuibert, Paris.
16. Quivy R. et Vancamperhoudt L. (1995), Manuel de recherche en sciences sociales, 2ème édition, Paris, Dunod.
17. Roussel P. (1998), Rémunération, motivation et satisfaction au travail, *Économica*.
18. Roussel P. (2000). La motivation au travail, concepts et théories, *Les notes du LIRHEn°326,* Toulouse.
19. Roussel P., Durrieu F., Campoy E. et EL Akremi A. (2002), Méthodes d'équations structurelles: recherche et application en Gestion, Paris, Économica.

© 2020 Global Journals

Global Journals Guidelines Handbook 2020

www.GlobalJournals.org

Memberships

Fellows/Associates of Social Science Research Council

FSSRC/ASSRC Memberships



Introduction

FSSRC/ASSRC is the most prestigious membership of Global Journals accredited by Open Association of Research Society, U.S.A (OARS). The credentials of Fellow and Associate designations signify that the researcher has gained the knowledge of the fundamental and high-level concepts, and is a subject matter expert, proficient in an expertise course covering the professional code of conduct, and follows recognized standards of practice. The credentials are designated only to the researchers, scientists, and professionals that have been selected by a rigorous process by our Editorial Board and Management Board.

Associates of FSSRC/ASSRC are scientists and researchers from around the world are working on projects/researches that have huge potentials. Members support Global Journals' mission to advance technology for humanity and the profession.

FSSRC

Fellow of Social Science Research Council

FELLOW OF SOCIAL SCIENCE RESEARCH COUNCIL is the most prestigious membership of Global Journals. It is an award and membership granted to individuals that the Open Association of Research Society judges to have made a 'substantial contribution to the improvement of computer science, technology, and electronics engineering.

The primary objective is to recognize the leaders in research and scientific fields of the current era with a global perspective and to create a channel between them and other researchers for better exposure and knowledge sharing. Members are most eminent scientists, engineers, and technologists from all across the world. Fellows are elected for life through a peer review process on the basis of excellence in the respective domain. There is no limit on the number of new nominations made in any year. Each year, the Open Association of Research Society elect up to 12 new Fellow Members.

Benefit

To the institution

Get letter of appreciation

Global Journals sends a letter of appreciation of author to the Dean or CEO of the University or Company of which author is a part, signed by editor in chief or chief author.



Exclusive Network

Get access to a closed network

A FSSRC member gets access to a closed network of Tier 1 researchers and scientists with direct communication channel through our website. Fellows can reach out to other members or researchers directly. They should also be open to reaching out by other.

Career | Credibility | Exclusive | Reputation



Certificate

Certificate, LOR and Laser-Momento

Fellows receive a printed copy of a certificate signed by our Chief Author that may be used for academic purposes and a personal recommendation letter to the dean of member's university.

Career | Credibility | Exclusive | Reputation



Designation

Get honored title of membership

Fellows can use the honored title of membership. The “FSSRC” is an honored title which is accorded to a person’s name viz. Dr. John E. Hall, Ph.D., FSSRC or William Walldroff, M.S., FSSRC.

Career | Credibility | Exclusive | Reputation

Recognition on the Platform

Better visibility and citation

All the Fellow members of FSSRC get a badge of "Leading Member of Global Journals" on the Research Community that distinguishes them from others. Additionally, the profile is also partially maintained by our team for better visibility and citation. All fellows get a dedicated page on the website with their biography.

Career | Credibility | Reputation

© Copyright by Global Journals | Guidelines Handbook

Future Work

Get discounts on the future publications

Fellows receive discounts on future publications with Global Journals up to 60%. Through our recommendation programs, members also receive discounts on publications made with OARS affiliated organizations.

Career | Financial



GJ Account

Unlimited forward of Emails

Fellows get secure and fast GJ work emails with unlimited forward of emails that they may use them as their primary email. For example,
john [AT] globaljournals [DOT] org.

Career | Credibility | Reputation



Premium Tools

Access to all the premium tools

To take future researches to the zenith, fellows receive access to all the premium tools that Global Journals have to offer along with the partnership with some of the best marketing leading tools out there.

Financial

Conferences & Events

Organize seminar/conference

Fellows are authorized to organize symposium/seminar/conference on behalf of Global Journal Incorporation (USA). They can also participate in the same organized by another institution as representative of Global Journal. In both the cases, it is mandatory for him to discuss with us and obtain our consent. Additionally, they get free research conferences (and others) alerts.

Career | Credibility | Financial

Early Invitations

Early invitations to all the symposiums, seminars, conferences

All fellows receive the early invitations to all the symposiums, seminars, conferences and webinars hosted by Global Journals in their subject.

Exclusive



Publishing Articles & Books

Earn 60% of sales proceeds

To take future researches to the zenith, fellows receive access to all the premium tools that Global Journals have to offer along with the partnership with some of the best marketing leading tools out there.

Exclusive | Financial

Reviewers

Get a remuneration of 15% of author fees

Fellow members are eligible to join as a paid peer reviewer at Global Journals Incorporation (USA) and can get a remuneration of 15% of author fees, taken from the author of a respective paper.

Financial

Access to Editorial Board

Become a member of the Editorial Board

Fellows may join as a member of the Editorial Board of Global Journals Incorporation (USA) after successful completion of three years as Fellow and as Peer Reviewer. Additionally, Fellows get a chance to nominate other members for Editorial Board.

Career | Credibility | Exclusive | Reputation

And Much More

Get access to scientific museums and observatories across the globe

All members get access to 5 selected scientific museums and observatories across the globe. All researches published with Global Journals will be kept under deep archival facilities across regions for future protections and disaster recovery. They get 10 GB free secure cloud access for storing research files.

© Copyright by Global Journals | Guidelines Handbook

ASSRC

ASSOCIATE OF SOCIAL SCIENCE RESEARCH COUNCIL

ASSOCIATE OF SOCIAL SCIENCE RESEARCH COUNCIL is the membership of Global Journals awarded to individuals that the Open Association of Research Society judges to have made a 'substantial contribution to the improvement of computer science, technology, and electronics engineering.

The primary objective is to recognize the leaders in research and scientific fields of the current era with a global perspective and to create a channel between them and other researchers for better exposure and knowledge sharing. Members are most eminent scientists, engineers, and technologists from all across the world. Associate membership can later be promoted to Fellow Membership. Associates are elected for life through a peer review process on the basis of excellence in the respective domain. There is no limit on the number of new nominations made in any year. Each year, the Open Association of Research Society elect up to 12 new Associate Members.

Benefit

To the institution

Get letter of appreciation

Global Journals sends a letter of appreciation of author to the Dean or CEO of the University or Company of which author is a part, signed by editor in chief or chief author.



Exclusive Network

Get access to a closed network

A ASSRC member gets access to a closed network of Tier 2 researchers and scientists with direct communication channel through our website. Associates can reach out to other members or researchers directly. They should also be open to reaching out by other.

Career | Credibility | Exclusive | Reputation



Certificate

Certificate, LoR and Laser-Momento

Associates receive a printed copy of a certificate signed by our Chief Author that may be used for academic purposes and a personal recommendation letter to the dean of member's university.

Career | Credibility | Exclusive | Reputation



Designation

Get honored title of membership

Associates can use the honored title of membership. The “ASSRC” is an honored title which is accorded to a person’s name viz. Dr. John E. Hall, Ph.D., ASSRC or William Walldroff, M.S., ASSRC.

Career | Credibility | Exclusive | Reputation

Recognition on the Platform

Better visibility and citation

All the Associate members of ASSRC get a badge of "Leading Member of Global Journals" on the Research Community that distinguishes them from others. Additionally, the profile is also partially maintained by our team for better visibility and citation.

Career | Credibility | Reputation

Future Work

Get discounts on the future publications

Associates receive discounts on future publications with Global Journals up to 30%. Through our recommendation programs, members also receive discounts on publications made with OARS affiliated organizations.

Career | Financial



GJ Account

Unlimited forward of Emails

Associates get secure and fast GJ work emails with 5GB forward of emails that they may use them as their primary email. For example, john [AT] globaljournals [DOT] org.

Career | Credibility | Reputation



Premium Tools

Access to all the premium tools

To take future researches to the zenith, fellows receive access to almost all the premium tools that Global Journals have to offer along with the partnership with some of the best marketing leading tools out there.

Financial

Conferences & Events

Organize seminar/conference

Associates are authorized to organize symposium/seminar/conference on behalf of Global Journal Incorporation (USA). They can also participate in the same organized by another institution as representative of Global Journal. In both the cases, it is mandatory for him to discuss with us and obtain our consent. Additionally, they get free research conferences (and others) alerts.

Career | Credibility | Financial

Early Invitations

Early invitations to all the symposiums, seminars, conferences

All associates receive the early invitations to all the symposiums, seminars, conferences and webinars hosted by Global Journals in their subject.

Exclusive



Publishing Articles & Books

Earn 60% of sales proceeds

Associates can publish articles (limited) without any fees. Also, they can earn up to 30-40% of sales proceeds from the sale of reference/review books/literature/publishing of research paper.

Exclusive | Financial

Reviewers

Get a remuneration of 15% of author fees

Associate members are eligible to join as a paid peer reviewer at Global Journals Incorporation (USA) and can get a remuneration of 15% of author fees, taken from the author of a respective paper.

Financial

And Much More

Get access to scientific museums and observatories across the globe

All members get access to 2 selected scientific museums and observatories across the globe. All researches published with Global Journals will be kept under deep archival facilities across regions for future protections and disaster recovery. They get 5 GB free secure cloud access for storing research files.

Associate	Fellow	Research Group	Basic
$4800 **lifetime designation**	$6800 **lifetime designation**	$12500.00 **organizational**	APC **per article**
Certificate, LoR and Momento **2** discounted publishing/year **Gradation** of Research **10** research contacts/day **1 GB** Cloud Storage **GJ** Community Access	**Certificate,** LoR and Momento **Unlimited** discounted publishing/year **Gradation** of Research **Unlimited** research contacts/day **5 GB** Cloud Storage **Online Presense** Assistance **GJ** Community Access	**Certificates,** LoRs and Momentos **Unlimited** free publishing/year **Gradation** of Research **Unlimited** research contacts/day **Unlimited** Cloud Storage **Online Presense** Assistance **GJ** Community Access	**GJ** Community Access

Preferred Author Guidelines

We accept the manuscript submissions in any standard (generic) format.

We typeset manuscripts using advanced typesetting tools like Adobe In Design, CorelDraw, TeXnicCenter, and TeXStudio. We usually recommend authors submit their research using any standard format they are comfortable with, and let Global Journals do the rest.

Alternatively, you can download our basic template from https://globaljournals.org/Template.zip

Authors should submit their complete paper/article, including text illustrations, graphics, conclusions, artwork, and tables. Authors who are not able to submit manuscript using the form above can email the manuscript department at submit@globaljournals.org or get in touch with chiefeditor@globaljournals.org if they wish to send the abstract before submission.

Before and during Submission

Authors must ensure the information provided during the submission of a paper is authentic. Please go through the following checklist before submitting:

1. Authors must go through the complete author guideline and understand and *agree to Global Journals' ethics and code of conduct,* along with author responsibilities.
2. Authors must accept the privacy policy, terms, and conditions of Global Journals.
3. Ensure corresponding author's email address and postal address are accurate and reachable.
4. Manuscript to be submitted must include keywords, an abstract, a paper title, co-author(s') names and details (email address, name, phone number, and institution), figures and illustrations in vector format including appropriate captions, tables, including titles and footnotes, a conclusion, results, acknowledgments and references.
5. Authors should submit paper in a ZIP archive if any supplementary files are required along with the paper.
6. Proper permissions must be acquired for the use of any copyrighted material.
7. Manuscript submitted *must not have been submitted or published elsewhere* and all authors must be aware of the submission.

Declaration of Conflicts of Interest

It is required for authors to declare all financial, institutional, and personal relationships with other individuals and organizations that could influence (bias) their research.

Policy on Plagiarism

Plagiarism is not acceptable in Global Journals submissions at all.

Plagiarized content will not be considered for publication. We reserve the right to inform authors' institutions about plagiarism detected either before or after publication. If plagiarism is identified, we will follow COPE guidelines:

Authors are solely responsible for all the plagiarism that is found. The author must not fabricate, falsify or plagiarize existing research data. The following, if copied, will be considered plagiarism:

- Words (language)
- Ideas
- Findings
- Writings
- Diagrams
- Graphs
- Illustrations
- Lectures

- Printed material
- Graphic representations
- Computer programs
- Electronic material
- Any other original work

Authorship Policies

Global Journals follows the definition of authorship set up by the Open Association of Research Society, USA. According to its guidelines, authorship criteria must be based on:

1. Substantial contributions to the conception and acquisition of data, analysis, and interpretation of findings.
2. Drafting the paper and revising it critically regarding important academic content.
3. Final approval of the version of the paper to be published.

Changes in Authorship

The corresponding author should mention the name and complete details of all co-authors during submission and in manuscript. We support addition, rearrangement, manipulation, and deletions in authors list till the early view publication of the journal. We expect that corresponding author will notify all co-authors of submission. We follow COPE guidelines for changes in authorship.

Copyright

During submission of the manuscript, the author is confirming an exclusive license agreement with Global Journals which gives Global Journals the authority to reproduce, reuse, and republish authors' research. We also believe in flexible copyright terms where copyright may remain with authors/employers/institutions as well. Contact your editor after acceptance to choose your copyright policy. You may follow this form for copyright transfers.

Appealing Decisions

Unless specified in the notification, the Editorial Board's decision on publication of the paper is final and cannot be appealed before making the major change in the manuscript.

Acknowledgments

Contributors to the research other than authors credited should be mentioned in Acknowledgments. The source of funding for the research can be included. Suppliers of resources may be mentioned along with their addresses.

Declaration of funding sources

Global Journals is in partnership with various universities, laboratories, and other institutions worldwide in the research domain. Authors are requested to disclose their source of funding during every stage of their research, such as making analysis, performing laboratory operations, computing data, and using institutional resources, from writing an article to its submission. This will also help authors to get reimbursements by requesting an open access publication letter from Global Journals and submitting to the respective funding source.

Preparing your Manuscript

Authors can submit papers and articles in an acceptable file format: MS Word (doc, docx), LaTeX (.tex, .zip or .rar including all of your files), Adobe PDF (.pdf), rich text format (.rtf), simple text document (.txt), Open Document Text (.odt), and Apple Pages (.pages). Our professional layout editors will format the entire paper according to our official guidelines. This is one of the highlights of publishing with Global Journals—authors should not be concerned about the formatting of their paper. Global Journals accepts articles and manuscripts in every major language, be it Spanish, Chinese, Japanese, Portuguese, Russian, French, German, Dutch, Italian, Greek, or any other national language, but the title, subtitle, and abstract should be in English. This will facilitate indexing and the pre-peer review process.

The following is the official style and template developed for publication of a research paper. Authors are not required to follow this style during the submission of the paper. It is just for reference purposes.

Manuscript Style Instruction (Optional)

- Microsoft Word Document Setting Instructions.
- Font type of all text should be Swis721 Lt BT.
- Page size: 8.27" x 11'", left margin: 0.65, right margin: 0.65, bottom margin: 0.75.
- Paper title should be in one column of font size 24.
- Author name in font size of 11 in one column.
- Abstract: font size 9 with the word "Abstract" in bold italics.
- Main text: font size 10 with two justified columns.
- Two columns with equal column width of 3.38 and spacing of 0.2.
- First character must be three lines drop-capped.
- The paragraph before spacing of 1 pt and after of 0 pt.
- Line spacing of 1 pt.
- Large images must be in one column.
- The names of first main headings (Heading 1) must be in Roman font, capital letters, and font size of 10.
- The names of second main headings (Heading 2) must not include numbers and must be in italics with a font size of 10.

Structure and Format of Manuscript

The recommended size of an original research paper is under 15,000 words and review papers under 7,000 words. Research articles should be less than 10,000 words. Research papers are usually longer than review papers. Review papers are reports of significant research (typically less than 7,000 words, including tables, figures, and references)

A research paper must include:

a) A title which should be relevant to the theme of the paper.
b) A summary, known as an abstract (less than 150 words), containing the major results and conclusions.
c) Up to 10 keywords that precisely identify the paper's subject, purpose, and focus.
d) An introduction, giving fundamental background objectives.
e) Resources and techniques with sufficient complete experimental details (wherever possible by reference) to permit repetition, sources of information must be given, and numerical methods must be specified by reference.
f) Results which should be presented concisely by well-designed tables and figures.
g) Suitable statistical data should also be given.
h) All data must have been gathered with attention to numerical detail in the planning stage.

Design has been recognized to be essential to experiments for a considerable time, and the editor has decided that any paper that appears not to have adequate numerical treatments of the data will be returned unrefereed.

i) Discussion should cover implications and consequences and not just recapitulate the results; conclusions should also be summarized.
j) There should be brief acknowledgments.
k) There ought to be references in the conventional format. Global Journals recommends APA format.

Authors should carefully consider the preparation of papers to ensure that they communicate effectively. Papers are much more likely to be accepted if they are carefully designed and laid out, contain few or no errors, are summarizing, and follow instructions. They will also be published with much fewer delays than those that require much technical and editorial correction.

The Editorial Board reserves the right to make literary corrections and suggestions to improve brevity.

Format Structure

It is necessary that authors take care in submitting a manuscript that is written in simple language and adheres to published guidelines.

All manuscripts submitted to Global Journals should include:

Title

The title page must carry an informative title that reflects the content, a running title (less than 45 characters together with spaces), names of the authors and co-authors, and the place(s) where the work was carried out.

Author details

The full postal address of any related author(s) must be specified.

Abstract

The abstract is the foundation of the research paper. It should be clear and concise and must contain the objective of the paper and inferences drawn. It is advised to not include big mathematical equations or complicated jargon.

Many researchers searching for information online will use search engines such as Google, Yahoo or others. By optimizing your paper for search engines, you will amplify the chance of someone finding it. In turn, this will make it more likely to be viewed and cited in further works. Global Journals has compiled these guidelines to facilitate you to maximize the web-friendliness of the most public part of your paper.

Keywords

A major lynchpin of research work for the writing of research papers is the keyword search, which one will employ to find both library and internet resources. Up to eleven keywords or very brief phrases have to be given to help data retrieval, mining, and indexing.

One must be persistent and creative in using keywords. An effective keyword search requires a strategy: planning of a list of possible keywords and phrases to try.

Choice of the main keywords is the first tool of writing a research paper. Research paper writing is an art. Keyword search should be as strategic as possible.

One should start brainstorming lists of potential keywords before even beginning searching. Think about the most important concepts related to research work. Ask, “What words would a source have to include to be truly valuable in a research paper?” Then consider synonyms for the important words.

It may take the discovery of only one important paper to steer in the right keyword direction because, in most databases, the keywords under which a research paper is abstracted are listed with the paper.

Numerical Methods

Numerical methods used should be transparent and, where appropriate, supported by references.

Abbreviations

Authors must list all the abbreviations used in the paper at the end of the paper or in a separate table before using them.

Formulas and equations

Authors are advised to submit any mathematical equation using either MathJax, KaTeX, or LaTeX, or in a very high-quality image.

Tables, Figures, and Figure Legends

Tables: Tables should be cautiously designed, uncrowned, and include only essential data. Each must have an Arabic number, e.g., Table 4, a self-explanatory caption, and be on a separate sheet. Authors must submit tables in an editable format and not as images. References to these tables (if any) must be mentioned accurately.

Figures

Figures are supposed to be submitted as separate files. Always include a citation in the text for each figure using Arabic numbers, e.g., Fig. 4. Artwork must be submitted online in vector electronic form or by emailing it.

Preparation of Eletronic Figures for Publication

Although low-quality images are sufficient for review purposes, print publication requires high-quality images to prevent the final product being blurred or fuzzy. Submit (possibly by e-mail) EPS (line art) or TIFF (halftone/ photographs) files only. MS PowerPoint and Word Graphics are unsuitable for printed pictures. Avoid using pixel-oriented software. Scans (TIFF only) should have a resolution of at least 350 dpi (halftone) or 700 to 1100 dpi (line drawings). Please give the data for figures in black and white or submit a Color Work Agreement form. EPS files must be saved with fonts embedded (and with a TIFF preview, if possible).

For scanned images, the scanning resolution at final image size ought to be as follows to ensure good reproduction: line art: >650 dpi; halftones (including gel photographs): >350 dpi; figures containing both halftone and line images: >650 dpi.

Color charges: Authors are advised to pay the full cost for the reproduction of their color artwork. Hence, please note that if there is color artwork in your manuscript when it is accepted for publication, we would require you to complete and return a Color Work Agreement form before your paper can be published. Also, you can email your editor to remove the color fee after acceptance of the paper.

Tips for writing a good quality Social Science Research Paper

Techniques for writing a good quality homan social science research paper:

1. Choosing the topic: In most cases, the topic is selected by the interests of the author, but it can also be suggested by the guides. You can have several topics, and then judge which you are most comfortable with. This may be done by asking several questions of yourself, like "Will I be able to carry out a search in this area? Will I find all necessary resources to accomplish the search? Will I be able to find all information in this field area?" If the answer to this type of question is "yes," then you ought to choose that topic. In most cases, you may have to conduct surveys and visit several places. Also, you might have to do a lot of work to find all the rises and falls of the various data on that subject. Sometimes, detailed information plays a vital role, instead of short information. Evaluators are human: The first thing to remember is that evaluators are also human beings. They are not only meant for rejecting a paper. They are here to evaluate your paper. So present your best aspect.

2. Think like evaluators: If you are in confusion or getting demotivated because your paper may not be accepted by the evaluators, then think, and try to evaluate your paper like an evaluator. Try to understand what an evaluator wants in your research paper, and you will automatically have your answer. Make blueprints of paper: The outline is the plan or framework that will help you to arrange your thoughts. It will make your paper logical. But remember that all points of your outline must be related to the topic you have chosen.

3. Ask your guides: If you are having any difficulty with your research, then do not hesitate to share your difficulty with your guide (if you have one). They will surely help you out and resolve your doubts. If you can't clarify what exactly you require for your work, then ask your supervisor to help you with an alternative. He or she might also provide you with a list of essential readings.

4. Use of computer is recommended: As you are doing research in the field of homan social science then this point is quite obvious. Use right software: Always use good quality software packages. If you are not capable of judging good software, then you can lose the quality of your paper unknowingly. There are various programs available to help you which you can get through the internet.

5. Use the internet for help: An excellent start for your paper is using Google. It is a wondrous search engine, where you can have your doubts resolved. You may also read some answers for the frequent question of how to write your research paper or find a model research paper. You can download books from the internet. If you have all the required books, place importance on reading, selecting, and analyzing the specified information. Then sketch out your research paper. Use big pictures: You may use encyclopedias like Wikipedia to get pictures with the best resolution. At Global Journals, you should strictly follow here.



6. Bookmarks are useful: When you read any book or magazine, you generally use bookmarks, right? It is a good habit which helps to not lose your continuity. You should always use bookmarks while searching on the internet also, which will make your search easier.

7. Revise what you wrote: When you write anything, always read it, summarize it, and then finalize it.

8. Make every effort: Make every effort to mention what you are going to write in your paper. That means always have a good start. Try to mention everything in the introduction—what is the need for a particular research paper. Polish your work with good writing skills and always give an evaluator what he wants. Make backups: When you are going to do any important thing like making a research paper, you should always have backup copies of it either on your computer or on paper. This protects you from losing any portion of your important data.

9. Produce good diagrams of your own: Always try to include good charts or diagrams in your paper to improve quality. Using several unnecessary diagrams will degrade the quality of your paper by creating a hodgepodge. So always try to include diagrams which were made by you to improve the readability of your paper. Use of direct quotes: When you do research relevant to literature, history, or current affairs, then use of quotes becomes essential, but if the study is relevant to science, use of quotes is not preferable.

10. Use proper verb tense: Use proper verb tenses in your paper. Use past tense to present those events that have happened. Use present tense to indicate events that are going on. Use future tense to indicate events that will happen in the future. Use of wrong tenses will confuse the evaluator. Avoid sentences that are incomplete.

11. Pick a good study spot: Always try to pick a spot for your research which is quiet. Not every spot is good for studying.

12. Know what you know: Always try to know what you know by making objectives, otherwise you will be confused and unable to achieve your target.

13. Use good grammar: Always use good grammar and words that will have a positive impact on the evaluator; use of good vocabulary does not mean using tough words which the evaluator has to find in a dictionary. Do not fragment sentences. Eliminate one-word sentences. Do not ever use a big word when a smaller one would suffice.

Verbs have to be in agreement with their subjects. In a research paper, do not start sentences with conjunctions or finish them with prepositions. When writing formally, it is advisable to never split an infinitive because someone will (wrongly) complain. Avoid clichés like a disease. Always shun irritating alliteration. Use language which is simple and straightforward. Put together a neat summary.

14. Arrangement of information: Each section of the main body should start with an opening sentence, and there should be a changeover at the end of the section. Give only valid and powerful arguments for your topic. You may also maintain your arguments with records.

15. Never start at the last minute: Always allow enough time for research work. Leaving everything to the last minute will degrade your paper and spoil your work.

16. Multitasking in research is not good: Doing several things at the same time is a bad habit in the case of research activity. Research is an area where everything has a particular time slot. Divide your research work into parts, and do a particular part in a particular time slot.

17. Never copy others' work: Never copy others' work and give it your name because if the evaluator has seen it anywhere, you will be in trouble. Take proper rest and food: No matter how many hours you spend on your research activity, if you are not taking care of your health, then all your efforts will have been in vain. For quality research, take proper rest and food.

18. Go to seminars: Attend seminars if the topic is relevant to your research area. Utilize all your resources.
Refresh your mind after intervals: Try to give your mind a rest by listening to soft music or sleeping in intervals. This will also improve your memory. Acquire colleagues: Always try to acquire colleagues. No matter how sharp you are, if you acquire colleagues, they can give you ideas which will be helpful to your research.

19. Think technically: Always think technically. If anything happens, search for its reasons, benefits, and demerits. Think and then print: When you go to print your paper, check that tables are not split, headings are not detached from their descriptions, and page sequence is maintained.

20. Adding unnecessary information: Do not add unnecessary information like "I have used MS Excel to draw graphs." Irrelevant and inappropriate material is superfluous. Foreign terminology and phrases are not apropos. One should never take a broad view. Analogy is like feathers on a snake. Use words properly, regardless of how others use them. Remove quotations. Puns are for kids, not grunt readers. Never oversimplify: When adding material to your research paper, never go for oversimplification; this will definitely irritate the evaluator. Be specific. Never use rhythmic redundancies. Contractions shouldn't be used in a research paper. Comparisons are as terrible as clichés. Give up ampersands, abbreviations, and so on. Remove commas that are not necessary. Parenthetical words should be between brackets or commas. Understatement is always the best way to put forward earth-shaking thoughts. Give a detailed literary review.

21. Report concluded results: Use concluded results. From raw data, filter the results, and then conclude your studies based on measurements and observations taken. An appropriate number of decimal places should be used. Parenthetical remarks are prohibited here. Proofread carefully at the final stage. At the end, give an outline to your arguments. Spot perspectives of further study of the subject. Justify your conclusion at the bottom sufficiently, which will probably include examples.

22. Upon conclusion: Once you have concluded your research, the next most important step is to present your findings. Presentation is extremely important as it is the definite medium though which your research is going to be in print for the rest of the crowd. Care should be taken to categorize your thoughts well and present them in a logical and neat manner. A good quality research paper format is essential because it serves to highlight your research paper and bring to light all necessary aspects of your research.

.

Informal Guidelines of Research Paper Writing

Key points to remember:

- Submit all work in its final form.
- Write your paper in the form which is presented in the guidelines using the template.
- Please note the criteria peer reviewers will use for grading the final paper.

Final points:

One purpose of organizing a research paper is to let people interpret your efforts selectively. The journal requires the following sections, submitted in the order listed, with each section starting on a new page:

The introduction: This will be compiled from reference matter and reflect the design processes or outline of basis that directed you to make a study. As you carry out the process of study, the method and process section will be constructed like that. The results segment will show related statistics in nearly sequential order and direct reviewers to similar intellectual paths throughout the data that you gathered to carry out your study.

The discussion section:

This will provide understanding of the data and projections as to the implications of the results. The use of good quality references throughout the paper will give the effort trustworthiness by representing an alertness to prior workings.

Writing a research paper is not an easy job, no matter how trouble-free the actual research or concept. Practice, excellent preparation, and controlled record-keeping are the only means to make straightforward progression.

General style:

Specific editorial column necessities for compliance of a manuscript will always take over from directions in these general guidelines.

To make a paper clear: Adhere to recommended page limits.



© Copyright by Global Journals | Guidelines Handbook

Mistakes to avoid:

- Insertion of a title at the foot of a page with subsequent text on the next page.
- Separating a table, chart, or figure—confine each to a single page.
- Submitting a manuscript with pages out of sequence.
- In every section of your document, use standard writing style, including articles ("a" and "the").
- Keep paying attention to the topic of the paper.
- Use paragraphs to split each significant point (excluding the abstract).
- Align the primary line of each section.
- Present your points in sound order.
- Use present tense to report well-accepted matters.
- Use past tense to describe specific results.
- Do not use familiar wording; don't address the reviewer directly. Don't use slang or superlatives.
- Avoid use of extra pictures—include only those figures essential to presenting results.

Title page:

Choose a revealing title. It should be short and include the name(s) and address(es) of all authors. It should not have acronyms or abbreviations or exceed two printed lines.

Abstract: This summary should be two hundred words or less. It should clearly and briefly explain the key findings reported in the manuscript and must have precise statistics. It should not have acronyms or abbreviations. It should be logical in itself. Do not cite references at this point.

An abstract is a brief, distinct paragraph summary of finished work or work in development. In a minute or less, a reviewer can be taught the foundation behind the study, common approaches to the problem, relevant results, and significant conclusions or new questions.

Write your summary when your paper is completed because how can you write the summary of anything which is not yet written? Wealth of terminology is very essential in abstract. Use comprehensive sentences, and do not sacrifice readability for brevity; you can maintain it succinctly by phrasing sentences so that they provide more than a lone rationale. The author can at this moment go straight to shortening the outcome. Sum up the study with the subsequent elements in any summary. Try to limit the initial two items to no more than one line each.

Reason for writing the article—theory, overall issue, purpose.

- Fundamental goal.
- To-the-point depiction of the research.
- Consequences, including definite statistics—if the consequences are quantitative in nature, account for this; results of any numerical analysis should be reported. Significant conclusions or questions that emerge from the research.

Approach:

- Single section and succinct.
- An outline of the job done is always written in past tense.
- Concentrate on shortening results—limit background information to a verdict or two.
- Exact spelling, clarity of sentences and phrases, and appropriate reporting of quantities (proper units, important statistics) are just as significant in an abstract as they are anywhere else.

Introduction:

The introduction should "introduce" the manuscript. The reviewer should be presented with sufficient background information to be capable of comprehending and calculating the purpose of your study without having to refer to other works. The basis for the study should be offered. Give the most important references, but avoid making a comprehensive appraisal of the topic. Describe the problem visibly. If the problem is not acknowledged in a logical, reasonable way, the reviewer will give no attention to your results. Speak in common terms about techniques used to explain the problem, if needed, but do not present any particulars about the protocols here.

The following approach can create a valuable beginning:

- Explain the value (significance) of the study.
- Defend the model—why did you employ this particular system or method? What is its compensation? Remark upon its appropriateness from an abstract point of view as well as pointing out sensible reasons for using it.
- Present a justification. State your particular theory(-ies) or aim(s), and describe the logic that led you to choose them.
- Briefly explain the study's tentative purpose and how it meets the declared objectives.

Approach:

Use past tense except for when referring to recognized facts. After all, the manuscript will be submitted after the entire job is done. Sort out your thoughts; manufacture one key point for every section. If you make the four points listed above, you will need at least four paragraphs. Present surrounding information only when it is necessary to support a situation. The reviewer does not desire to read everything you know about a topic. Shape the theory specifically—do not take a broad view.

As always, give awareness to spelling, simplicity, and correctness of sentences and phrases.

Procedures (methods and materials):

This part is supposed to be the easiest to carve if you have good skills. A soundly written procedures segment allows a capable scientist to replicate your results. Present precise information about your supplies. The suppliers and clarity of reagents can be helpful bits of information. Present methods in sequential order, but linked methodologies can be grouped as a segment. Be concise when relating the protocols. Attempt to give the least amount of information that would permit another capable scientist to replicate your outcome, but be cautious that vital information is integrated. The use of subheadings is suggested and ought to be synchronized with the results section.

When a technique is used that has been well-described in another section, mention the specific item describing the way, but draw the basic principle while stating the situation. The purpose is to show all particular resources and broad procedures so that another person may use some or all of the methods in one more study or referee the scientific value of your work. It is not to be a step-by-step report of the whole thing you did, nor is a methods section a set of orders.

Materials:

Materials may be reported in part of a section or else they may be recognized along with your measures.

Methods:

- Report the method and not the particulars of each process that engaged the same methodology.
- Describe the method entirely.
- To be succinct, present methods under headings dedicated to specific dealings or groups of measures.
- Simplify—detail how procedures were completed, not how they were performed on a particular day.
- If well-known procedures were used, account for the procedure by name, possibly with a reference, and that's all.

Approach:

It is embarrassing to use vigorous voice when documenting methods without using first person, which would focus the reviewer's interest on the researcher rather than the job. As a result, when writing up the methods, most authors use third person passive voice.

Use standard style in this and every other part of the paper—avoid familiar lists, and use full sentences.

What to keep away from:

- Resources and methods are not a set of information.
- Skip all descriptive information and surroundings—save it for the argument.
- Leave out information that is immaterial to a third party.



© Copyright by Global Journals | Guidelines Handbook

Results:

The principle of a results segment is to present and demonstrate your conclusion. Create this part as entirely objective details of the outcome, and save all understanding for the discussion.

The page length of this segment is set by the sum and types of data to be reported. Use statistics and tables, if suitable, to present consequences most efficiently.

You must clearly differentiate material which would usually be incorporated in a study editorial from any unprocessed data or additional appendix matter that would not be available. In fact, such matters should not be submitted at all except if requested by the instructor.

Content:

- Sum up your conclusions in text and demonstrate them, if suitable, with figures and tables.
- In the manuscript, explain each of your consequences, and point the reader to remarks that are most appropriate.
- Present a background, such as by describing the question that was addressed by creation of an exacting study.
- Explain results of control experiments and give remarks that are not accessible in a prescribed figure or table, if appropriate.
- Examine your data, then prepare the analyzed (transformed) data in the form of a figure (graph), table, or manuscript.

What to stay away from:

- Do not discuss or infer your outcome, report surrounding information, or try to explain anything.
- Do not include raw data or intermediate calculations in a research manuscript.
- Do not present similar data more than once.
- A manuscript should complement any figures or tables, not duplicate information.
- Never confuse figures with tables—there is a difference.

Approach:

As always, use past tense when you submit your results, and put the whole thing in a reasonable order.

Put figures and tables, appropriately numbered, in order at the end of the report.

If you desire, you may place your figures and tables properly within the text of your results section.

Figures and tables:

If you put figures and tables at the end of some details, make certain that they are visibly distinguished from any attached appendix materials, such as raw facts. Whatever the position, each table must be titled, numbered one after the other, and include a heading. All figures and tables must be divided from the text.

Discussion:

The discussion is expected to be the trickiest segment to write. A lot of papers submitted to the journal are discarded based on problems with the discussion. There is no rule for how long an argument should be.

Position your understanding of the outcome visibly to lead the reviewer through your conclusions, and then finish the paper with a summing up of the implications of the study. The purpose here is to offer an understanding of your results and support all of your conclusions, using facts from your research and generally accepted information, if suitable. The implication of results should be fully described.

Infer your data in the conversation in suitable depth. This means that when you clarify an observable fact, you must explain mechanisms that may account for the observation. If your results vary from your prospect, make clear why that may have happened. If your results agree, then explain the theory that the proof supported. It is never suitable to just state that the data approved the prospect, and let it drop at that. Make a decision as to whether each premise is supported or discarded or if you cannot make a conclusion with assurance. Do not just dismiss a study or part of a study as "uncertain."



Research papers are not acknowledged if the work is imperfect. Draw what conclusions you can based upon the results that you have, and take care of the study as a finished work.

- You may propose future guidelines, such as how an experiment might be personalized to accomplish a new idea.
- Give details of all of your remarks as much as possible, focusing on mechanisms.
- Make a decision as to whether the tentative design sufficiently addressed the theory and whether or not it was correctly restricted. Try to present substitute explanations if they are sensible alternatives.
- One piece of research will not counter an overall question, so maintain the large picture in mind. Where do you go next? The best studies unlock new avenues of study. What questions remain?
- Recommendations for detailed papers will offer supplementary suggestions.

Approach:

When you refer to information, differentiate data generated by your own studies from other available information. Present work done by specific persons (including you) in past tense.

Describe generally acknowledged facts and main beliefs in present tense.

The Administration Rules

Administration Rules to Be Strictly Followed before Submitting Your Research Paper to Global Journals Inc.

Please read the following rules and regulations carefully before submitting your research paper to Global Journals Inc. to avoid rejection.

Segment draft and final research paper: You have to strictly follow the template of a research paper, failing which your paper may get rejected. You are expected to write each part of the paper wholly on your own. The peer reviewers need to identify your own perspective of the concepts in your own terms. Please do not extract straight from any other source, and do not rephrase someone else's analysis. Do not allow anyone else to proofread your manuscript.

Written material: You may discuss this with your guides and key sources. Do not copy anyone else's paper, even if this is only imitation, otherwise it will be rejected on the grounds of plagiarism, which is illegal. Various methods to avoid plagiarism are strictly applied by us to every paper, and, if found guilty, you may be blacklisted, which could affect your career adversely. To guard yourself and others from possible illegal use, please do not permit anyone to use or even read your paper and file.

Criterion for Grading a Research Paper (Compilation) by Global Journals

Please note that following table is only a Grading of "Paper Compilation" and not on "Performed/Stated Research" whose grading solely depends on Individual Assigned Peer Reviewer and Editorial Board Member. These can be available only on request and after decision of Paper. This report will be the property of Global Journals

Topics	Grades		
	A-B	**C-D**	**E-F**
Abstract	Clear and concise with appropriate content, Correct format. 200 words or below	Unclear summary and no specific data, Incorrect form Above 200 words	No specific data with ambiguous information Above 250 words
Introduction	Containing all background details with clear goal and appropriate details, flow specification, no grammar and spelling mistake, well organized sentence and paragraph, reference cited	Unclear and confusing data, appropriate format, grammar and spelling errors with unorganized matter	Out of place depth and content, hazy format
Methods and Procedures	Clear and to the point with well arranged paragraph, precision and accuracy of facts and figures, well organized subheads	Difficult to comprehend with embarrassed text, too much explanation but completed	Incorrect and unorganized structure with hazy meaning
Result	Well organized, Clear and specific, Correct units with precision, correct data, well structuring of paragraph, no grammar and spelling mistake	Complete and embarrassed text, difficult to comprehend	Irregular format with wrong facts and figures
Discussion	Well organized, meaningful specification, sound conclusion, logical and concise explanation, highly structured paragraph reference cited	Wordy, unclear conclusion, spurious	Conclusion is not cited, unorganized, difficult to comprehend
References	Complete and correct format, well organized	Beside the point, Incomplete	Wrong format and structuring

INDEX

A

Adolescence · 1, 2
Aesthetic · 12, 15, 19
Amusement · 3
Anxiety · 6, 7, 46, 47, 50, 52
Apparent · 12, 13
Assumption · 1, 5, 16, 18

C

Conservation · 20
Contemporary · 6, 19, 20, 21

D

Denying · 12
Desirous · 2
Deterioration · 6, 47
Didactic · 13, 20
Distinctive · 11, 13
Duality · 16

E

Empiricism · 20
Erosion · 19
Exhaustion · 6, 7
Exhilaration · 6
Existence · 1, 2, 24, 42
Explicitly · 16

F

Fascinating · 12, 13, 15
Fatigue · 6, 45, 46, 47, 52

H

Habitual · 11

I

Implications · 1
Inferred · 45
Inherent · 1
Inheritance · 20
Intrusive · 47

O

Observant · 13
Occurrence · 1, 6, 45

P

Passively · 1
Perceived · 19, 23, 45
Prominent · 3

R

Redefinition · 20
Resistance · 6
Reticent · 18
Revealing · 1

S

Spatial · 19, 20
Spiritual · 44, 48, 50
Spurred · 4
Strenuous · 6
Stressors · 6, 7, 44, 45, 46, 47, 48, 49, 51
Sympathetic · 18

T

Tendency · 3, 6, 21

V

Varsity · 4
Versatile · 11
Viable · 2

W

Widespread · 20



save our planet



Global Journal of Human Social Science

Visit us on the Web at www.GlobalJournals.org | www.SocialScienceResearch.org
or email us at helpdesk@globaljournals.org



ISSN 975587

© Global Journals