Online ISSN: 2249-460X
Print ISSN: 0975-587X
DOI: 10.17406/GJHSS

Global Journal

of Human Social Sciences: C

Sociology & Culture



Assessment of Social Factors

Child Marriages in Shamva District

Highlights

Engendering Social Exclusion

Evidence from Slum of Narayangonj

Discovering Thoughts, Inventing Future

VOLUME 18 ISSUE 1 VERSION 1.0

© 2001-2018 by Global Journal of Human Social Sciences, USA

Volume 18 Issue 4 was originally issued as C1

Global Journal of Human-Social Science: C
Sociology & Culture

Volume 18 Issue 4
Originally issued as C1

Global Journal of Human-Social Science: C

Sociology & Culture

Volume 18 Issue 1 (Ver. 1.0)

Open Association of Research Society

© Global Journal of Human Social Sciences. 2018.

All rights reserved.

This is a special issue published in version 1.0 of "Global Journal of Human Social Sciences." By Global Journals Inc.

All articles are open access articles distributed under "Global Journal of Human Social Sciences"

Reading License, which permits restricted use. Entire contents are copyright by of "Global Journal of Human Social Sciences" unless otherwise noted on specific articles.

No part of this publication may be reproduced or transmitted in any form or by any means, electronic or mechanical, including photocopy, recording, or any information storage and retrieval system, without written permission.

The opinions and statements made in this book are those of the authors concerned. Ultraculture has not verified and neither confirms nor denies any of the foregoing and no warranty or fitness is implied.

Engage with the contents herein at your own risk.

The use of this journal, and the terms and conditions for our providing information, is governed by our Disclaimer, Terms and Conditions and Privacy Policy given on our website http://globaljournals.us/terms-and-condition/menu-id-1463/

By referring / using / reading / any type of association / referencing this journal, this signifies and you acknowledge that you have read them and that you accept and will be bound by the terms thereof.

All information, journals, this journal, activities undertaken, materials, services and our website, terms and conditions, privacy policy, and this journal is subject to change anytime without any prior notice.

Incorporation No.: 0423089
License No.: 42125/022010/1186
Registration No.: 430374
Import-Export Code: 1109007027
Employer Identification Number (EIN):
USA Tax ID: 98-0673427

Global Journals Inc.

*(A Delaware USA Incorporation with "Good Standing"; **Reg. Number: 0423089**)*

Sponsors: Open Association of Research Society
Open Scientific Standards

Publisher's Headquarters office

Global Journals® Headquarters
945th Concord Streets,
Framingham Massachusetts Pin: 01701,
United States of America
USA Toll Free: +001-888-839-7392
USA Toll Free Fax: +001-888-839-7392

Offset Typesetting

Global Journals Incorporated
2nd, Lansdowne, Lansdowne Rd., Croydon-Surrey,
Pin: CR9 2ER, United Kingdom

Packaging & Continental Dispatching

Global Journals Pvt Ltd
E-3130 Sudama Nagar, Near Gopur Square,
Indore, M.P., Pin:452009, India

Find a correspondence nodal officer near you

To find nodal officer of your country, please email us at *local@globaljournals.org*

eContacts

Press Inquiries: *press@globaljournals.org*
Investor Inquiries: *investors@globaljournals.org*
Technical Support: *technology@globaljournals.org*
Media & Releases: *media@globaljournals.org*

Pricing (Excluding Air Parcel Charges):

Yearly Subscription (Personal & Institutional)
250 USD (B/W) & 350 USD (Color)

Editorial Board

Global Journal of Human Social-Science

Dr. Prasad V Bidarkota

Ph.D.,
Department of Economics
Florida International University
USA

Dr. Giaime Berti

Ph.D.
School of Economics and Management
University of Florence, Italy

Dr. Gisela Steins

Ph.D. Psychology, University of Bielefeld, Germany
Professor, General and Social Psychology, University of Duisburg-Essen, Germany

Dr. Rita Mano

Ph.D. Rand Corporation and University of California, Los Angeles, USA
Dep. of Human Services,
University of Haifa

Dr. Heying Jenny Zhan

B.A., M.A., Ph.D. Sociology, University of Kansas, USA
Department of Sociology
Georgia State University, US

Dr. Adrian Armstrong

BSc Geography, LSE, 1970
Ph.D. Geography (Geomorphology)
Kings College London 1980
Ordained Priest, Church of England 1988
Taunton, Somerset,
United Kingdom

Dr. Periklis Gogas

Associate Professor
Department of Economics,
Democritus University of Thrace
Ph.D., Department of Economics,
University of Calgary, Canada

Dr. Stephen E. Haggerty

Ph.D. Geology & Geophysics,
University of London
Associate Professor
University of Massachusetts, USA

Dr. Edward C. Hoang,

Ph.D.,
Department of Economics,
University of Colorado USA

Dr. Valerie Zawilski

Associate Professor,
Ph.D. - University of Toronto
MA - Ontario Institute for Studies in Education

Dr. Bruce Cronin

B.A., M.A., Ph.D. in Political Science, Columbia University
Professor, City College of New York, US

Dr. Danielle Riverin-Simard

B.A., M.A., Ph.D., Cognitive training, University Laval, Canada
Professor Emeritus of Education and Educational Psychology,
Laval University, Canada

Dr. Arturo Diaz Suarez

Ed.D., Ph.D. in Physical Education
Professor at University of Murcia, Spain

Dr. Raymond K. H. Chan

Ph.D., Sociology, University of Essex, UK
Associate Professor City University of Hong Kong, China

Dr. Kaneko Mamoru

Ph.D., Tokyo Institute of Technology
Structural Engineering
Faculty of Political Science and Economics, Waseda University, Tokyo, Japan

Dr. Luisa dall'Acqua

Ph.D. in Sociology (Decisional Risk sector),
Master MU2, College Teacher in Philosophy (Italy),
Edu-Research Group, Zürich/Lugano

Dr. Hugo Nami

Ph.D.in Anthropological Sciences,
Universidad of Buenos Aires, Argentina,
University of Buenos Aires, Argentina

Dr. Helmut Digel

Ph.D. University of Tübingen, Germany
Honorary President of German Athletic Federation (DLV), Germany

Dr. Vesna Stanković Pejnović

Ph. D. Philospohy
Zagreb, Croatia
Rusveltova, Skopje Macedonia

Dr. Tao Yang

Ohio State University
M.S. Kansas State University
B.E. Zhejiang University

Dr. Alis Puteh

Ph.D. (Edu.Policy) UUM
Sintok, Kedah, Malaysia
M.Ed (Curr. & Inst.)
University of Houston, US

Dr. Asunción López-Varela

BA, MA (Hons), Ph.D. (Hons)
Facultad de Filología.
Universidad Complutense Madrid
29040 Madrid Spain

Dr. Thierry Feuillet

Géolittomer – LETG UMR 6554 CNRS
(Université de Nantes)
Institut de Géographie et d'Aménagement
Régional de l'Université de Nantes.
Chemin de la Censive du Tertre – BP
Rodez

Dr. Mohd Hairy

Mohd Hairy, PhD (Urban Climate), Masters
(Environmental Management)
(National University of Malaysia)
& Degree In Geography (Hons),
University Malaya, Malaysia.

Contents of the Issue

i. Copyright Notice
ii. Editorial Board Members
iii. Chief Author and Dean
iv. Contents of the Issue

1. Social and Psychological Underpinning of the Bar-Tal and Antebi's Concept of General Siege Mentality within Different Ethnic Groups. *1-11*
2. Listening Unheard Voices of the Age-Old People: An Evidence-Based Study in Bangladesh. *13-18*
3. Assessment of Social Factors that Influence Residential Area Preference in Otukpo Town, Benue State. Nigeria. *19-22*
4. Engendering Social Exclusion: *Evidence from Slum of Narayangonj City Corporation of Bangladesh*. *23-29*
5. Child Marriages in Shamva District of Zimbabwe. *31-38*

v. Fellows
vi. Auxiliary Memberships
vii. Preferred Author Guidelines
viii. Index

Global Journal of human-social science: C
Sociology & Culture
Volume 18 Issue 1 Version 1.0 Year 2018
Type: Double Blind Peer Reviewed International Research Journal
Publisher: Global Journals
Online ISSN: 2249-460x & Print ISSN: 0975-587X

Social and Psychological Underpinning of the Bar-Tal and Antebi's Concept of General Siege Mentality within Different Ethnic Groups

By Zlatko Šram & Jasminka Dulić
University of the Sacred Heart

Abstract- The aim of this research was to find out (1) whether social alienation, right-wing authoritarianism (RWA), and primary psychopathy are significant predictors of Daniel Bar-Tal & Dikla Antebi's concept of general siege mentality (GSM), and (2) whether the components of the path model are invariant across different ethnic groups. The survey was carried out on the adult population in the region of eastern Croatia where live Croats and Serbian ethnic minority, and in the northern region of Serbia where live the members of Croatian ethnic minority (The Province of Vojvodina). The convenience and purposive sample consisted of 1431 full aged participants. Multiple-group analysis of structural invariance was used to test whether differences observed in the structural parameters across different ethnic groups are statistically significant.

Keywords: psychopathy, right-wing authoritarianism, social alienation, siege mentality, croats, serbian ethnic minority, Croatian ethnic minority.

GJHSS-C Classification: FOR Code: 170199



Strictly as per the compliance and regulations of:

© 2018. Zlatko Šram & Jasminka Dulić. This is a research/review paper, distributed under the terms of the Creative Commons Attribution-Noncommercial 3.0 Unported License http://creative commons.org/licenses/by-nc/3.0/), permitting all non-commercial use, distribution, and reproduction in any medium, provided the original work is properly cited.

Social and Psychological Underpinning of the Bar-Tal and Antebi's Concept of General Siege Mentality within Different Ethnic Groups

Zlatko Šram [α] & Jasminka Dulić [σ]

Abstract- The aim of this research was to find out (1) whether social alienation, right-wing authoritarianism (RWA), and primary psychopathy are significant predictors of Daniel Bar-Tal & Dikla Antebi's concept of general siege mentality (GSM), and (2) whether the components of the path model are invariant across different ethnic groups. The survey was carried out on the adult population in the region of eastern Croatia where live Croats and Serbian ethnic minority, and in the northern region of Serbia where live the members of Croatian ethnic minority (The Province of Vojvodina). The convenience and purposive sample consisted of 1431 full aged participants. Multiple-group analysis of structural invariance was used to test whether differences observed in the structural parameters across different ethnic groups are statistically significant. All path estimates were significant, in the expected direction and indicated much similarity in structural relationships across different ethnic groups. It might be concluded that social alienation, right-wing authoritarianism, and primary psychopathy had expressed the causal effects on emerging general siege mentality across different ethnic groups. The structural paths for different ethnic groups can be considered identical if Chi-square does not reveal a statistically significant difference between unconstrained and constrained models. It was found out that difference in path estimates for different ethnic groups had not been significant, which means that constrained multiple group model was accepted. Results showed that ethnic belongings did not significantly moderate relations between variables. About 36% of the variance of general siege mentality was explained by social alienation, right-wing authoritarianism, and primary psychopathy for the full sample in the accepted constrained model. There is an evidence that a more complex and severe political-psychological disorder is underpinning the Bar-Tal & Antebi's concept of general siege mentality than a mere perceived national threat, independently of political-historical context.

Keywords: psychopathy, right-wing authoritarianism, social alienation, siege mentality, croats, serbian ethnic minority, Croatian ethnic minority.

I. Introduction

Daniel Bar-Tal & Dikla Antebi (1992a) introduced the concept of siege mentality, defining it „as a mental state in which members of a group hold a central belief that the rest of the world has highly negative behavioral intentions towards them" (p. 634). It is a cognitive state describing a situation in which other groups or nations are perceived to have intentions to do wrong or inflict harm on one's own group or a nation. Such a belief, formerly called as Masada Syndrome (Bar-Tal, 1986), is accompanied by thoughts that a nation is „'alone' in the world, that there is a threat to their existence, that the group must be united in the face of danger, that they cannot expect help from anyone in time of need, and that all means are justified for group defense" (Bar-Tal & Antebi, 1992a, p. 634). Despite the fact that Bar-Tal and Antebi (1992a) emphasized that the crucial focus of siege mentality was on the rest of the world or out-groups that had highly negative intentions toward one's own society (a belief in the negative attention of the world), we argue that the content of siege mentality belief refers to a more complex sociopolitical-psychological phenomenon. According to the content of general siege mentality scale (Bar-Tal & Antebi, 1992a), we could have concluded that it encompassed not only the cognitive repertoire (CR) but also a potential behavioral repertoire (BR): (1) the existence of perceived national threat (CR), (2) experience of a hostile world (CR), (3) mistrust and suspicion toward other nations (CR), (4) the need for an internal national and political homogenization (BR), and (5) the existence of readiness for a warlike defense (BR). As a matter of fact, the behavioral component of siege mentality is implicitly noted by the authors when they say that "the study of group's siege mentality is of special importance, since it may shed light on various groups' behavior" (Bar-Tal & Antebi, 1992b, p. 252). Insomuch as such a cognitive - behavioral schema, as siege mentality actually represents, may be the bases for understanding different kinds of hostile inter-ethnic and international relations that could be largely destructive and might have a sinister effect on the group's life, the investigation of its socio-political (social alienation), socio-cultural (right-wing authoritarianism), and psychological (primary psychopathy) underpinnings seem more important. It is in that sense that we speak about social and psychological underpinning of the Bar-Tal and Antebi's concept of general siege mentality.

It is reasonable to assume that siege mentality is a consequence of historical memories and "especially primed by contextual objects and events" (Bar-Tal & Antebi, 1992a, p. 635). It was specially emphasized that

Author α: Ph.D. Visiting Research Fellow University of the Sacred Heart Gulu Gulu-Uganda. e-mail: zsram@ush.ac.ug
Author σ: Ph.D. Croatian Center for Applied Social Research Zagreb, Croatia. e-mail: jasdulic@gmail.com

© 2018 Global Journals

"siege mentality is not an inherited disposition or a stable trait, but a temporary state of mind that can last for either a short or long period of time, depending on the group's perceived experiences and on the educational, cultural, political, and social mechanisms that maintain it" (Bar-Tal & Antebi, 1992b, p. 252). However, we wanted to question the position that siege mentality is not a relatively stable trait of personality and is exclusively depending on historical memories, the group's perceived experiences and political contexts. Given the psychological meaning of siege mentality within the context of intergroup threat theory posed by Stephan & Renfro (2002), siege mentality represents much more a realistic than symbolic threat. Namely, a realistic group threat indicates the existence of a threat to a group's (nation's) power, resources, general welfare, i.e. where other groups (nations) threaten the very existence of its own group or nation (Stephan, Ybarra & Morrison, 2009). If we compare the definition of siege mentality as "a central belief that the rest of the world has highly negative behavioral intentions toward" its own group (Bar-Tal & Antebi, 1992a) and the definition of a realistic threat as an experience "when members of one group perceive that another group is in a position to cause them harm" (Stephan et al., 2009, p. 43), especially referring to physical harm or a loss o resources, we can note the sociopolitical-psychological similarity between the concept of siege mentality and a theoretical position of a realistic group or national threat consists in the fact that there is the existence of external enemies who are perceived to endanger and threaten one's own group or a nation. Thus, we can conclude that external realistic group threats are underlying siege mentality. In other words, siege mentality is the product of or generated from an external threat perception, implying most often the perception of existing external enemies i.e. intergroup threats. But, what about a social internal threat perception that may be underlying siege mentality? Are there some internal social, cultural, and individual factors producing and generating siege mentality, implying the perception of internal i.e. threats existing within the same society? Is it possible that the members of a group perceive its own society as sources and origins of national threat perception in the form of siege mentality, or some personality predisposition would contribute to the emerging of siege mentality?

a) Social Alienation

Social alienation is defined as perceived formlessness in a society, expressing distrust toward other people, feeling social powerlessness, and feeling meaningless in one's life (Seeman, 1959, 1983; Šram, 2007, 2009). Such a social perception and personal feeling can surely generate a kind of collective and individual threat. In other words, social alienation can be defined, as "the subjective reflection of social conditions of powerlessness, the inability to achieve goals, and the absence of supportive, trusting relationships" (Ross, 2011, p. 288). These social cognitions or socially alienated beliefs and attitudes come from reality and therefore present realistic perceptions of social conditions (Mirowsky & Ross, 2003). Insomuch as social alienation presents a realistic perception of social condition the people live in, we could treat social alienation as a kind of realistic threat generating from an interaction between person and society.

b) Right-wing authoritarianism

The second concept we put in relationship to siege mentality was right-wing authoritarianism. Authoritarians show a strong tendency to uncritically submit to authorities, are adherent to social norms and tradition, and express a general aggressiveness toward those who violate these norms, rules, and values (Altemeyer, 1981, 2006). It was posited that actual or perceived threat was a significant predictor of right-wing authoritarianism (Onraet, Van Hiel, Dhont & Pattyn, 2013) and hypothesized that various forms of threat may contribute to authoritarianism (Feldman & Stenner, 1997). In other words, higher levels of external threats were related to higher levels of authoritarianism. Given such a relationship between perceived threat and authoritarianism, it seems that threat perception is an antecedent of authoritarian attitudes (Onraet, Dhont & Van Hiel, 2014). However, there is a bidirectional effect between threat perceptions and authoritarianism (Rippl & Seipel, 2012). In other words, having right-wing attitudes may lead to an increased threat perception (Sibley & Duckitt, 2013). In addition, there is a mediator of the threat-authoritarianism link. Mirisola and his associates (2014) have shown that societal threat fosters right-wing authoritarianism via the mediation of the loss of perceived control (Mirisola, Roccato, Russo, Spagna & Vieno, 2014).

c) Primary Psychopathy

Levenson, Kiehl, and Fitzpatrick's (1995) concept of primary psychopathy encompasses the affective-interpersonal characteristics. This subtype of psychopathy indicates the existence of a pathological personality style that is affectively cold and interpersonally deceptive (Neumann & Pardini, 2014). Primary psychopathy encompasses individuals who are selfish, uncaring, callous, unemotional, manipulative, and show a lack of remorse (Levenson et al., 1995). It can be defined in terms of interpersonal dysfunctions (Cleckley, 1982; Snowden, Craig & Gray, 2012) or be defined as a cognitive-interpersonal model characterized by a coercive style of relating to others that is supported by expectations of hostility (Gullhaugen & Nottestad, 2012). Given that perceived threat can play a significant role in the correlation between personality traits and attitudes (Sibley & Duckitt, 2008; Sibley, Osborne & Duckitt, 2012), we expected that psychopathy would be associated with

© 2018 Global Journals

siege mentality as a sort of threat perception. For instance, psychopathy has been shown to have associations with negative intergroup attitudes and behaviors (Hodson, Hogg & MacInnis, 2009).

d) Aims and Hypothesis

Thus, the aims of our research was to find out (1) whether social alienation, right-wing authoritarianism (RWA), and primary psychopathy have significant effects on the Daniel Bar-Tal and Dikla Antebi's concept of general siege mentality (GSM), and (2) whether the components of the path model are invariant across different ethnic groups, i.e within Croatian ethnic majority group, Serbian ethnic minority group in Croatia, and Croatian ethnic minority group in Serbia. Based on prior direct or indirect research findings, we hypothesized that social alienation (as a socio-political component of the model), right-wing authoritarianism (as a socio-cultural component of the model), and primary psychopathy (as a clinical-psychological component of the model) underlie siege mentality across different ethnic groups. Our second hypothesis was that structural models of the examined variables within different ethnic groups will be variant within different ethnic groups who had different perceived experiences and historical memories, as a legacy of greater Serbia war against Croatia led in the 90-ties in the last century. It was reasonable to expect that ethnic belonging would significantly moderate relations between the variables.

II. Method

a) Participants and Procedure

The survey was carried out on the adult population in the region of eastern Croatia where live Croats and Serbian ethnic minority, and in the northern region of Serbia (The Province of Vojvodina) where live the members of Croatian ethnic minority. The convenience and the purposive sample consisted of 1431 full aged participants (Croats: N=555; Serbian ethnic minority in Croatia: N=555; Croatian ethnic minority in Serbia-Vojvodina: N=321). The mean age of participants was 44.10 (SD=15.83), 48 percent were males, 52% were females. Correlations among sociodemo graphic characteristics are presented in Table 1. We can see that ethnic subsamples were mainly equalized as to the sex, age, and school attainment (statistically significant correlations between ethnicity and some sociodemo graphics are due to a very large sample). The older participants had a lower degree of school attainment what is regularly expected. The self-report questionnaires were administered to respondents in their own homes by the interviewers. The respondents were asked to fill the questionnaire by themselves. The filled questionnaires were picked up by the interviewers the next day. This research report is a part of a much larger investigation from the field of political science, sociology, and psychology.

Table 1: Correlations among the sociodemo graphic characteristics of the total sample (N=1431)

Sociodemo graphics

Ethnicity	Sex	Age	School	Attainment
Ethnicity	1.00			
Sex	-0.05*	1.00		
Age	0.03	0.00	1.00	
School attainment	-0.06*	-0.01	-0.16**	1.00

**p=0.05, **p<0.01*

III. Measures

Four measures were applied: (1) general siege mentality scale, (2) social alienation, (3) right-wing authoritarianism (RWA), and (4) primary psychopathy. The responses of the first three measures were rated on a 5-point Likert-type scale: 1. strongly disagree, 2. disagree, 3. neither agree nor disagree, 4. agree, 5. strongly agree. Primary psychopathy was measured on a 4-point Likert-type scale: 1. strongly disagree, 2. disagree somewhat, 3. agree somewhat, 4. strongly agree.

General siege mentality scale (GSMS). The scale was constructed on the basis of the conception of Masada Syndrome presented by Bar-Tal (1986). The GSMS was comprised of 12 items. The items included feelings of loneliness in the world, negative attitudes toward the world, sensitivity to cues indicating negative intentions of the world, increased pressure to conformity within the in-group, and use of all means for self-defense (Bar-Tal and Antebi, 1992). The items of the GSMS are presented in Table 1 in the Appendix.

Social alienation. The scale is constructed on the basis of basis of Seeman' concept of alienation (Seeman, 1959) and an earlier measure of social alienation developed by Šram (2007, 2009). The scale constructed for this study was comprised of 15 items. The social alienation scale indicated attitudes toward the society (normlessness), toward other people (distrust), his/her locus of control (powerlessness), and sense of future (meaninglessness). The items of the scale are presented in Table 2 in the Appendix.

Right-wing authoritarianism (RWA). The scale was constructed on the basis of items from Altemeyer's original RWA scale published in his book „The Authoritarians" (Altemeyer, 2006). The score of this RWA scale was not computed in the way the author suggested, but on a 5-point Likert-type scale comprised

© 2018 Global Journals

of 22 items. The RWA scale indicated a high degree of submission to the established, legitimate authorities in society, high levels of aggression in the name of their authorities, and a high level of conventionalism. The items of the RWA scale are presented in Table 3 in the Appendix.

Primary psychopathy. Primary psychopathy measure was extracted from the Levenson Self-Report Psychopathy Scale (LSRP) (Levenson, Kiehl & Fitzpatric, 1995). The primary psychopathy items (16 in number) were created to assess a callous-unemotional style, selfishness, and tendency to manipulate others. The primary psychopathy items derived from the LSRP are presented in Table 4 in the Appendix.

The Cronbach's alpha coefficients indicated an acceptable internal consistency for the primary psychopathy scale, good for the general siege mentality scale and the RWA scale, and an excellent internal consistency for the social alienation scale, and that the scores of all the measures were normally distributed (Table 2).

Table 2: Descriptive statistics of total scores on the composite variables of general siege mentality, social alienation, RWA, primary psychopathy, and Cronbach's alpha coefficients

	Composite						
Variables	Min	Max	M	SD	Skewness	Kurtosis	Alpha
General siege mentality	12	56	31.29	8.03	0.15	-0.06	0.80
Social alienation	15	75	49.00	12.99	-0.15	-0.21	.93
RWA	25	106	63.55	12.32	-0.27	0.66	0.84
Primary psychopathy	16	61	31.41	7.27	0.19	-0.20	0.79

IV. Results

a) Correlational Analysis

We wanted to see how the examined composite variables were mutually correlated with the criterion variable within different ethnic samples. It is critical to ensure that the predictor variables do not have differential associations with the criterion variable (general siege mentality) within different ethnic groups. Pearson-product moment correlation coefficients were calculated as a measure of the strength and directions of linear relationships among the examined variables. In Tables 3 and 4 we can see that within different ethnic groups the construct of general siege mentality is positively correlated with social alienation, right-wing authoritarianism, and primary psychopathy. However, we can notice slight differences as to the strength of associations within different ethnic groups. First, the strength of correlation between siege mentality and all predictor variables is the same within the Croatian majority. Second, siege mentality is somewhat more strongly correlated with right-wing authoritarianism and primary psychopathy, and somewhat lesser correlated with primary psychopathy within both the Serbian minority in Croatia and Croatian minority in Serbia. Third, social alienation is correlated with both right-wing authoritarianism and primary psychopathy within Croatian and Serbian ethnic minority groups.

Table 3: Correlations among siege mentality, social alienation, RWA, and primary psychopathy within the Croatian ethnic group

Predictor variable	Croats			
	1	2	3	4
1 General siege mentality	1.00			
2 Social alienation	0.38***	1.00		
3 RWA	0.38***	0.06	1.00	
4 Primary psychopathy	0.37***	0.31***	0.03	1.00

***p<01, ***p<0.001*

Table 4: Correlations among siege mentality, social alienation, RWA, and primary psychopathy within Serbian and Croatian ethnic minority groups

Predictor variable	Serbian minority in Croatia				Croatian minority in Serbia			
	1	2	3	4	1	2	3	4
1 General siege mentality	1.00				1.00			
2 Social alienation	0.45***	1.00			0.45***	1.00		
3 RWA	0.44***	0.33***	1.00		0.54***	0.35***	1.00	
4 Primary psychopathy	0.30***	0.20**	0.29***	1.00	.26***	0.24***	0.06	1.00

****p<0.001*

© 2018 Global Journals

V. Path Analysis

In order to examine whether different ethnic belongings moderated the paths, multiple-group path analysis was employed using the LISREL 8.52 software program for Windows (Jöreskog and Sörbom, 1996). Namely, we wanted to examine simultaneous relationships between multiple observed variables in the hypothesized path model across three ethnic groups. Are certain paths in a specified causal structure invariant across the population, is one of the questions that researchers are typically interested in multi-group invariance analysis (Byrne, 2014). That is the question on which we tried to find the answer in this research.

First, we used path analysis to estimate structural relationships hypothesized by the model for the full sample. Since the full group model may mask effects specific to the ethnic groups, after we examined the model for all three groups jointly, we examined the model for all three ethnic groups separately that is Croats in Croatia, Serbian minority in Croatia, and Croatian minority in Serbia. Having examined structural model on all three groups jointly and separately for each group, we employed a more formal way to analyze the structural model in which all groups are analysed simultaneously. First, we conducted multi-sample path analysis with no equality constraints on parameter estimates across the groups and then we imposed cross-group equality constraints on the path coefficients. Multiple-group path analysis was employed to examine and test whether differences in the structural parameters across ethnic groups were statistically significant. Testing for cross-group invariance involved comparing two nested models: (1) a baseline model wherein no constraints were specified, and (2) a second model where all paths were constrained to be invariant between the groups. All path estimates (path coefficients interpreted as regression coefficients) were significant, in the expected direction and indicated much similarity in structural relationships (Figures 1, 2, 3).

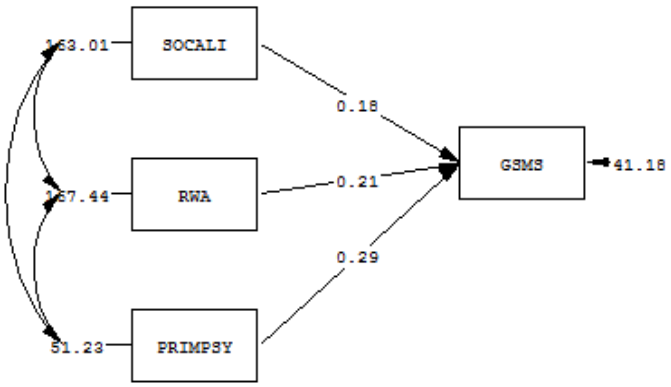

Figure 1: Unconstrained model of path analysis for Croats in Croatia

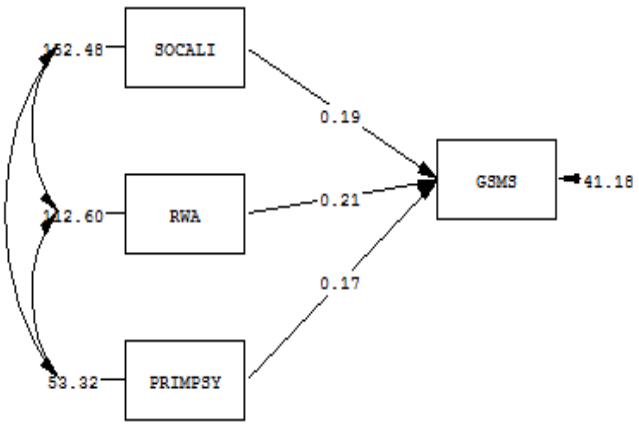

Figure 2: Unconstrained model of path analysis for Serbian minority in Croatia

© 2018 Global Journals

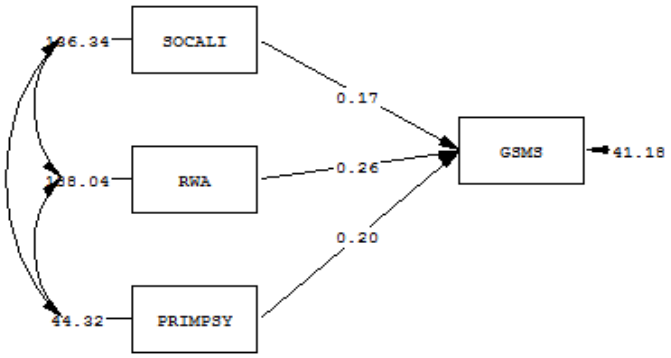

Figure 3: Unconstrained model of path analysis for Croatian minority in Serbia

Group goodness-of-fit statistics of constrained and unconstrained model for different ethnic groups are presented in Table 6. Global goodness-of-fit statistics for unconstrained and constrained model is shown in Table 7. We compared the model in which path coefficients were constrained with a fit of an unconstrained model using the difference in Chi-square statistics. The structural paths for different ethnic groups can be considered identical if Chi-square does not reveal a statistically significant difference between unconstrained and constrained models. In our case, the difference between Chi-square of unconstrained and constrained multiple group path model equals $\Delta\chi 2 = 7.1$, and the difference in degrees of freedom is $\Delta df = 6$. With $p = 0.31$ it can be concluded that difference in path estimates for different ethnic groups are not significant, which means that constrained multiple group model is accepted (Figure 4). Results showed that ethnic belongings did not significantly moderate relations between the variables. About 36% of the variance of general siege mentality was explained by social alienation, right-wing authoritarianism, and primary psychopathy for the full sample in the accepted constrained model.

Table 6: Group goodness-of-fit statistics

		Contribution to Chi-square	RMR	SRMR	GFI
Unconstrained model	Croats in Croatia	0.21 (15.24%)	0.360	0.005	1.00
	Serbs in Croatia	0.78 (58.88%)	0.720	0.012	1.00
	Croats in Serbia	0.34 (25.28%)	0.029	0.000	1.00
Constrained model	Croats in Croatia	3.61 (42.66%)	1.160	0.020	1.00
	Serbs in Croatia	2.86 (33.89%)	1.130	0.018	1.00
	Croats in Serbia	1.98 (23.45%)	1.750	0.017	1.00

Table 7: Global goodness-of-fit statistics

Model	Chi-Square	df	NFI	CFI	RMSEA	R^2
Constrained	8.39 (0.39)	8.00	0.99	1.00	0.01	0.36
Unconstrained	1.35 (0.51)	2.00	1.00	1.00	0.00	0.38

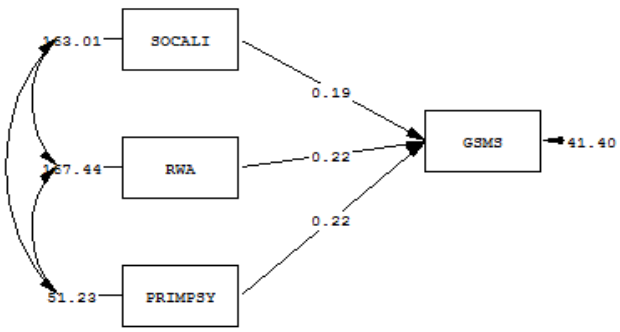

Figure 4: Constrained model of path analysis for the full sample

© 2018 Global Journals

VI. Discussion

We examined the previously unexplored relationship between social alienation, right-wing authoritarianism, primary psychopathy, and general siege mentality within Croats, Serbian ethnic minority in Croatia, and Croatian minority in Serbia. Our results show that siege mentality was positively correlated with social alienation, right-wing authoritarianism, and primary psychopathy within all three ethnic samples. Although moderate, the correlations indicate that a more complex sociopolitical-psychological phenomenon is underlying the Bar-Tal & Antebi's (1992a) concept of general siege mentality. Thus, there is an evidence of the existence of social and psychological underpinning of the concept of siege mentality that represents not only the cognitive repertoire but also a potential behavioral repertoire (Bar-Tal & Antebi, 1992b). Our first hypothesis, concerning the effects of social alienation, right-wing authoritarianism, and primary psychopathy on siege mentality, was confirmed. Path analysis was used to estimate structural relationships hypothesized by the model. All path estimates (path coefficients interpreted as regression coefficients) were significant in expected direction in all three ethnic groups. There was much similarity in structural relationships within different ethnic groups. Since „the path model represents the hypothesis of correlated causes" (Kline, 2010, p.105), we might conclude that social alienation, right-wing authoritarianism, and primary psychopathy express the causal effects on emerging general siege mentality across different ethnic groups. The results showed that ethnic belongings did not significantly moderate relations between variables. This is the finding that was unexpected, having in mind different perceived experiences and historic memories of the three ethnic groups. One of the possible interpretations of this finding may be in the fact that "... loss of memories becomes an active construction and reconstruction of the past from the standpoint of the present" (Tileaga, 2013, p. 111) and that memory, "...and different forms of its narration, can constitute a threat to societal cohesion and consensus" (Tileaga, p. 113). In other words, siege mentality need not necessarily be exclusively depending on historical memories, the group's perceived experiences, as argued Bar-Tal & Antebi (1992b).

We have proved that social alienation as an indicator of social and political distrust (Ross, 2011; Seeman, 1959; Šram, 2009), right-wing authoritarianism as a measure of desire for social order (Altemeyer, 1981) that bears resemblance to the hierarchy-related cultural dimension and that can reflect a culture-inclusive orientation (Chien, 2016), and primary psychopathy as an ego defense mechanism (Meloy, 2004) reflect some kind of internal threats within a society that antecede and predict siege mentality. Thus, not only external realistic group threats (outside society) but perceiving internal threats (within society) and personality predisposition contribute to the emerging of siege mentality. Insomuch as social alienation presents the cognitive repertoire of interpreting the intentions and behaviors of other people and political institutions as unsupportive, hostile, self-seeking, dishonest and, as a matter of fact, threatening, we can notice that social alienation resembles the concept of siege mentality in a degree it presents the group members' cognitive repertoire of interpreting the intentions and behaviors of out-groups and other nations as hostile, mistrustful, and threatening. The political-psychological difference in these two concepts is in that that social alienation presents an internal realistic group threat and a weak social control while siege mentality presents an external realistic group threat and a weak national security control. What they have in common is the presence of perceived threat and expression of inherently social beliefs about relationships with other people. But both social alienation and siege mentality signify a collective threat. Perceived collective threat, regardless of be it either internal or external, is alienating and distressing even when these threats are not realized in personal victimization (Ross, 2011).

Both social alienation and authoritarianism are the worldviews that help to establish a personal and interpersonal sense of order, structure, and control (Nicol & Rounding, 2013). Insomuch as the loss of personal control over social world resembles socio-psychologically to social alienation, we could conclude that siege mentality (as a kind of societal threat) fosters right-wing authoritarianism via the mediation of social alienation. Given a bidirectional effect between threat perceptions and authoritarianism, we could argue that authoritarianism fosters siege mentality via the mediation of social alienation. In other words, individuals who are more authoritarian and, at the same time, socially alienated more easily and readily express the cognitive repertoire of siege mentality or national threat perception.

A significant contribution of primary psychopathy to siege mentality is in line with research that found out the association between threat perception and high level of psychopathy (Serin, 1991; Šram, 2015). Individuals with high levels of psychopathy have a tendency to attribute hostile intentions to others in their social environments. Given the similarity in psychological meaning of primary psychopathy and siege mentality, in a sense that both constructs signify the attribution of hostile intentions to other people, it was reasonable to expect that psychopathy is underlying siege mentality to a certain degree. Schmidt & Muldoom (2013) found out that threat perceptions are correlated with poorer psychological well-being in the sense that perceived intergroup threat has a consequence for psychological well-being. But, we raised a question why the perceived threat would not be a consequence of a

© 2018 Global Journals

poor well-being? In other words, why we should not expect primary psychopathy as a mental disorder to affect threat perception, i.e. siege mentality? In any case, individual affective and motivational factors are psychological dispositions that should be taken into account when explaining siege mentality, as any other attitude formation (Dinesen, Klemmensen & Norgaard, 2014; Gerber, Huber, Doherty & Dowling, 2010) given the impact of emotion on information processing and perception (Clore & Gasper, 2000). Taking all the findings into consideration, there is an evidence that a more complex and severe political-psychological disorder is underpinning the Bar-Tal & Antebi's concept of general siege mentality than a mere perceived national threat, independently of political-historical context. If implied in a social science research, the General siege mentality scale (GSMS) would be a very useful tool to capture a much wider political-psychological meaning than Bar-Tal & Antebi (1992a, 1992b) supposed the scale could capture. We should be very cautious when using intergroup threat theory posed by Stephan & Renfro (2002) in explaining various social and political issues, because deep-seated social, cultural, political, and personality disorders may be underpinning perceived threat. We also wish to address some limitations of our research. Limitation of our research is that our data are cross-sectional. That is why we cannot draw confident conclusions about the nature of causality. Our findings should be replicated in future research in other contexts and ethnic groups.

Acknowledgement

This work would not have been possible without the financial support of the Institute for Migration and Ethnic Studies (Croatia) and the Institute of Culture of Croats in Vojvodina (Serbia). We are especially indepted to the Serb National Council (Croatia) for giving us a great support in carrying out the field survey within Serbian ethnic minority in Croatia.

References Références Referencias

1. Altemeyer, B. (1981). *Right-wing authoritarianism*: Winnipeg, Canada: University of Manitoba Press.
2. Altemyer, B. (2006). *The authoritarians*. Winnipeg, Canada: University of Manitoba (chapter 1, pp. 10-15).
3. Bar-Tal, D. & Antebi, D. (1992a). Beliefs about negative intentions of the world: A study of the Israeli siege mentality. *Political Psychology*, 13 (4), 633-645.
4. Bar-Tal, D. & Antebi, D. (1992b). Siege mentality in Israel. *International Journal of Intercultural Relations*, 16 (3), 251-275.
5. Byrne, M. B. (2014). *Structural equation modeling with LISREL, PRELIS and SIMPLIS: Basic concepts, applications and programming*. New York, London: Psychology Press, Taylor & Francis Group.
6. Cacioppo, J. T. & Cacioppo, S. (2014). Social relationships and health: The toxic effects of perceived social isolation. *Social and Personality Psychology Compass*, 8 (2), 58-72.
7. Chien, C.-L. (2016). Beyond authoritarian personality: The culture-inclusive theory of Chinese authoritarian orientation. *Frontiers in Psychology*, 7.924.
8. Cleckley, H. (1982). *The mask of sanity (6th edition)*. St. Louis, MO: C. V. Mosby Co.
9. Clore, G. L. & Gasper, K. (2000). Feeling is believing: Some affective influences on belief. In N. H. Frijda, A. S. R. Manstead & S. Bem (eds.), *Emotions and Beliefs: How feelings influence thoughts* (pp. 10-44). Cambridge: Cambridge University Press.
10. Dinesen, P. T. (2014). Attitudes toward immigration: The role of personal predispositions. *Political Psychology*, 37 (1), 55-72.
11. Feldman, S. & Stenner, K. (1997). Perceived threat and authoritarianism. *Political Psychology*, 18 (4), 741-770.
12. Gerber, A. S., Huber, G. A., Doherty, D. & Dowling, C. M. (2010). Personality and political attitudes: Relationships across issue domains and political contexts. *American Political Science Review*, 104 (), 111-133.
13. Gullhaugen, A. S. & Nottestad, J. A. (2012). Under the surface: The dynamic interpersonal and affective world of Psychopathic high-security and detention prisoners. *International Journal of Offender Therapy and Comparative Criminology*, 56 (6), 917-936.
14. Hodson, G., Hogg, S. M. & MacInnis, C. C. (2009). The role of „dark personalities" (narcissism, Machiavellianism, psychopathy), Big Five personality factors, and ideology in explaining prejudice. Journal of Research in Personality, 43 (4), 686-690.
15. Jöreskog, K.G. & Sörbom, D. (1996). *LISREL 8: User's reference guide*. Lincolnwood: Scientific Software International.
16. Kline, B.R. (2011). *Principles and practices of structural equation modeling*. New York, London: The Guilford Press.
17. Levenson, M. R., Kiehl, K. A. & Fitzpatrick, C. M. (1995). Assessing psychopathic attributes in noninstitutionalized population. *Journal of Personality and Social Psychology*, 68 (1), 151-158).
18. Meloy, J. R. (2004). *The psychopathic mind: Origins, dynamics, and treatment*. Lanham, MD: Rowman and Littlefield.
19. Mirisola, A., Roccato, M., Russo, S., Spagna, G. & Vieno, A. (2014). Societal threat to safety, compensatory control, and right-wing authoritarianism. *Political Psychology*, 35 (6), 795-812.
20. Mirowsky, J. & Ross, C.E. (2003). *Social causes of psychological distress* (2nd edition). New Brunswick, NJ: Aldine Transaction.

© 2018 Global Journals

21. Nicol, A. A. M. & Rounding, K. (2013). Alienation and empathy as mediators of the relation between Social dominance Orientation, Right-Wing Authoritarianism and expressions of racism and sexism. *Personality and Individual Differences*, 55 (3), 294-299.
22. Onraet, E., Dhont, K. & Van Hiel, A. (2014). The relationships between internal and external threats and right-wing attitudes: A three-level longitudinal study. *Personality and Social Psychological Bulletin*, 40 (6), 712-725.
23. Onraet, E., Van Hiel, A., Dhont, K. & Pattyn, S. (2013). Internal and external threat in relationship with right-wing attitudes. *Journal of Personality*, 81 (3), 233-246.
24. Rippl, S. & Seipel, C. (2012). Threat appraisal and authoritarianism in context: Reactions to the European Union enlargement in border regions. *Journal of Applied Social Psychology*, 42 (11), 2758-2775.
25. Ross, C. E. (2011). Collective threat, trust, and sense of personal control. Journal of Health and Social Behavior, 52 (3), 287-296.
26. Schmid, K. & Muldoon, O. T. (2013). Perceived threat, social identification, and psychological well-being: The Effects of Political Conflict Exposure. *Political Psychology*, 36 (1), 75-92.
27. Seeman, M. (1959). On the meaning of alienation. *American Sociological Review*, 24 (6), 783-791.
28. Serin, R. C. (1991). Psychopathy and violence in criminals. *Journal of Interpersonal Violence*, 6 (4), 423-431.
29. Snowden, R. J., Craig, R. & Gray, N. S. (2012). Detection and recognition of emotional expressions: Effects of traits of personality disorder and gender. *Personality and Individual Differences*, 54 (2),158-163.
30. Stephan, W. G. & Renfro, C. L. (2002). The role of threats in intergroup relations. In D. Mackie & E. R. Smith (Eds.), *From prejudice to intergroup emotions* (pp. 191-208). New York: Psychology Press.
31. Stephan, W. G., Ybarra, O. & Morrison, K. R. (2009). Intergroup threat theory. In T. D. Nelson (Ed.), *Handbook of prejudice, stereotyping, and discrimination* (pp. 43-59). New York: Psychology Press.
32. Sibley, C. G. & Duckitt, J. (2008). Personality and prejudice: A meta-analysis and theoretical review. *Personality and Social Psychology Review*, 3 (3), 248-279.
33. Sibley, C. G., Osborne, D. & Duckitt, J. (2012). Personality and political orientation: Meta-analysis and test of Threat-Constraint Model. *Journal of Research in Personality*, 46 (6), 664-677.
34. Šram, Z. (2007). Anomija, depresivnost i antizapadna orijentacija (Anomie, depressiveness, and anti-Western orientation). *Revija za sociologiju* (*Sociological Review*), 38 (3-4), 103-118.
35. Šram, Z. (2009). Socialna alijenacija bunjevačkih Hrvata u Vojvodini (Social alienation of the Croatian Bunjevci in Vojvodina). *Sociologija i prostor* (*Sociology and Space*), 47 (1), 3-25.
36. Šram, Z. (2015). Psychopathic personality trait (PPT-1), national closeness and prejudice, and ethnic minority threat perception. *The international Journal of Social Sciences and Humanities Invention*, 2 (12), 1770-1779.
37. Tileaga, C. (2013). *Political Psychology: Critical perspectives*. New York NY: Cambridge University Press.

Appendix

Table 1: The general siege mentality scale (GSMS)

1. There is no place for internal criticism in times of danger.
2. Anyone who opposes the majority opinion weakens the strength of the nation.
3. In order to continue to exist, we have to act according to the rule „if anyone comes to kill you, kill him first".
4. We can't rely on advice from other nations because they do not necessarily have our welfare at heart.
5. There have always been countries which looked for closeness and friendship with us (*reversed*).
6. Because of the persistent danger to our existence, we must end internal disagreements.
7. Our existence is the end which justifies the means.
8. The whole world is against us.
9. Only demonstration of force will deter our enemies from attacking us.
10. Only unity will save us from external enemies.
11. When neighboring countries get into conflicts, we will often be blamed for it.
12. Most nations will conspire against us, if only they have the possibility to do so

Table 2: The social alienation scale (SOCALI-2)

1. There is no social institution in our society that functions properly and can be truly relied upon.
2. There is nothing good we can expect from the future.
3. Most people cannot be trusted.
4. Our society is full of lies and hypocrisy.

© 2018 Global Journals

5. The society we live in sometimes seems to me worse than hell itself.
6. Most people would try to take advantage of me if they got the chance.
7. In order to achieve something, one is forced to cheat and lie.
8. These days a man can live from day to day, without being able to plan anything for the future.
9. Most of the time people are looking out for themselves.
10. Only the criminals can get rich in our society.
11. There is very little I can do about my life because all depends on others.
12. The people just pretend to be our friends.
13. Just a few people respect any laws in our society.
14. Only a small number of the things that happen in my life are under my control.
15. Most of the people are in the depth of their soul evil and corrupted.

Table 3: The right-wing authoritarianism scale (RWA)

1. The established authorities general turn out to be right things, while radicals and protestors are usually „loud mouths "showing off their ignorance.
2. Women should have to promise to obey their husbands when they get married.
3. Our country desperately needs a mighty leader who will do what has to be done to destroy the radical new ways and sinfulness that are ruining us.
4. Gays and lesbians are just as healthy and moral as anybody else (*reversed*).
5. It is always better to trust the judgment of the proper authorities in government and religion than to listen to the noisy rabble-rousers in our society who are trying to create doubt in people's mind.
6. Atheists and others who have rebelled against the established religions are no doubt every bit as good and virtuous as those who attend church regularly (*reversed*).
7. The only way our country can get through the crisis ahead is to get back to our traditional values, put some tough leaders in prison and silence the troublemakers spreading bad ideas.
8. The is absolutely nothing wrong with nudist camps (*reversed*).
9. Our country needs free thinkers who have the courage to defy traditional ways, even if this upsets many people (*reversed*).
10. Our country will be destroyed someday if we do not smash the perversions eating away at our moral fiber and traditional beliefs.
11. Everyone should have their own lifestyle, religious beliefs, and sexual preferences, even if it makes them different from anyone else (*reversed*).
12. The „old-fashioned ways "and the„ old-fashioned values" still show the best way to live.
13. You have to admire those who challenged the law and the majority's view by protesting for women's abortion rights, for animal rights, or to abolish school prayer (*reversed*).
14. What our country really needs is a strong, determined leader who will crush evil, and take us back to our true path.
15. Some of the best people in our country are those who are challenging our government, criticizing religion, and ignoring the „normal way things are supposed to be done" (*reversed*).
16. God's laws about abortion, pornography and marriage must be strictly followed before it is too late, and those who break them must be strongly published.
17. There are many radical, immoral people in our country today, who are trying to ruin it for their own godless purposes, whom the authorities should put out of action.
18. A„ woman's place "should be wherever she wants to be. The days when women are submissive to their husbands and social conventions belong strictly in the past (*reversed*).
19. Our country will be great if we honor the ways of our forefathers, do what the authorities tell us to do, and get rid of the„ rotten apples "who are ruining everything.
20. There is no„ ONE right way "to live life; everybody has to create their own way (*reversed*).
21. Homosexuals and feminists should be praised for being brave enough to defy„ traditional family values "(*reversed*).
22. This country would work a lot better if certain groups of troublemakers would just shut up and accept their group's traditional place in society.

Table 4: Primary psychopathy in the Levenson self-report psychopathy scale (LSRP)

1. In today's world, I feel justified in doing anything I can get away with to succeed.
2. My main purpose in life is getting as many goodies as I can.
3. Even if I were trying very hard to sell something, I wouldn't lie about it (*reversed*).

© 2018 Global Journals

4. I enjoy manipulating other people's feelings.
5. Looking out for my self is my top priority.
6. I tell other people what they want to hear so that they will do what I want them to do.
7. Cheating is not justifiable because it is unfair to others (*reversed*).
8. I would be upset if my success came at someone else's expense (*reversed*).
9. For me, what's right is whatever I can get away with.
10. 1Success is based on survival of the fittest; I am not concerned about the losers.
11. I feel bad if my words or actions cause someone else to feel emotional pain (*reversed*).
12. Making a lot of money is my most important goal.
13. I let others worry about higher values; my main concern is with the bottom line.
14. I often admire a really clever scam.
15. People who are stupid enough to get ripped off usually deserve it.
16. I make of point of trying not to hurt others in pursuit of my goals (*reversed*).

© 2018 Global Journals

This page is intentionally left blank

© 2018 Global Journals

Global Journal of human-social science: C
Sociology & Culture
Volume 18 Issue 1 Version 1.0 Year 2018
Type: Double Blind Peer Reviewed International Research Journal
Publisher: Global Journals
Online ISSN: 2249-460X & Print ISSN: 0975-587X

Listening Unheard Voices of the Age-Old People: An Evidence-Based Study in Bangladesh

By Md. Aminur Rahman & Md. Taufiq Ahmmad

University of Rajshahi

Abstract- There are many problems in Bangladesh society, and few of them are visible, and few are invisible. The life of Age-old people is mostly unheard of the collected information. However, all acknowledge their contribution to family and society, as well national level. There is a Chinese proverb, “Death of an older person is the end of a library”. Besides, they are sometimes addressed `Old is Gold`; but in reality, the Age-old people are ignored fully in our present fabricated social structure. This study collected `evidence and testimonies` of twenty-five age-old people both male and female, in Bangladesh. Research revealed that most of them are suffering without minimal assistance from government and society, and it has intersectional characters also. Female is more sufferer than male, and it has another gender dimension. In a nutshell, both male and female, both are existing out-side of security circle. This article helps to understand the life-cycle of age-old people and make recommendations that will be helpful for aging and social policy area. For Bangladesh, they will be benefitted and get rid of an intersectional life cycle by implementation of the recommendations.

Keywords: *age old people, social poverty, social policy.*

GJHSS-C Classification: *FOR Code: 160899*



Strictly as per the compliance and regulations of:

© 2018. Md. Aminur Rahman & Md. Taufiq Ahmmad. This is a research/review paper, distributed under the terms of the Creative Commons Attribution-Noncommercial 3.0 Unported License http://creative commons.org/licenses/by-nc/3.0/), permitting all non-commercial use, distribution, and reproduction in any medium, provided the original work is properly cited.

Listening Unheard Voices of the Age-Old People: An Evidence-Based Study in Bangladesh

Md. Aminur Rahman [α] & Md. Taufiq Ahmmad [σ]

Abstract- There are many problems in Bangladesh society, and few of them are visible, and few are invisible. The life of Age-old people is mostly unheard of the collected information. However, all acknowledge their contribution to family and society, as well national level. There is a Chinese proverb, "Death of an older person is the end of a library". Besides, they are sometimes addressed `Old is Gold`; but in reality, the Age-old people are ignored fully in our present fabricated social structure. This study collected `evidence and testimonies` of twenty-five age-old people both male and female, in Bangladesh. Research revealed that most of them are suffering without minimal assistance from government and society, and it has intersectional characters also. Female is more sufferer than male, and it has another gender dimension. In a nutshell, both male and female, both are existing out-side of security circle. This article helps to understand the life-cycle of age-old people and make recommendations that will be helpful for aging and social policy area. For Bangladesh, they will be benefitted and get rid of an intersectional life cycle by implementation of the recommendations.

Keywords: age old people, social poverty, social policy.

I. Introduction

There is a proverb, "Old is gold", considers `elderly population',[1] who are the asset of any nation. Actually, they have a huge contribution to our national development, and it needs to acknowledge. But they are facing severe problems in their daily lives. Elderly is a reality, and they have hard experience that related to their survival especially when they are in 60 years and over.

Elderly is related to aging, and `aging causes a functional deterioration and vulnerability that also creates physical changes as well. Aging is a social process that involves individual and population aging, biological and psychological aging, and social change, and cultural differences within and between age cohorts and cross-cultural and sub-cultural differences in values, beliefs, and norms (Mcpherson, 1991).

Author α: Ph.D. Senior Research Fellow South Asian Studies Center Dhaka, Bangladesh. e-mail: dr.aminur65@gmail.com
Author σ: Ph.D. Fellow Institute of Bangladesh Studies University of Rajshahi, Bangladesh. e-mail: taufiqkgc@gmail.com

[1] In this paper 'elderly people' means who are 60 years and over age-old. It also meant age-old people that used in this paper.

There are many opinions, but Social thinkers are mostly concerned about social factors of aging that may be termed as social aging. Social aging is a multidimensional and dynamic force. It includes the transition into and out of roles, expectations about behavior, societal allocation of resources and opportunities, negotiation about the meaning and implications of chronological age and the experience of individuals' traveling the life course and negotiating life stages (Morgan and Kunkel, 2001).

a) *Aging Scenario in Bangladesh: A Brief*

In Bangladesh, aging (age-old people) is considered 60 years and over old people. And as data (BBS: SVRS, 2015) it is shown, in rural areas, 8.2% population belongs to 60 and over-aged and 6.9% existing in urban areas.

Table-1: Percentage distribution of sample population by age, sex

Age group	Rural			Urban		
	Male	Female	Both Sex	Male	Female	Both sex
60-64 year	3.1%	3.1%	3.1%	3.0%	2.7%	2.9%
65+ year	5.5%	7.7%	5.1%	4.3%	3.6%	4.0%
Total	8.6%	10.8%	8.2%	7.3%	6.03%	6.9%

Source: Bangladesh Sample Vital Statistics 2015; BBS, May 2016, p-15

Table-2: Marital status by residence SVRS 2015

Age group	Rural		Both Sex
Male	Total	Rural	Urban
Widowed	1.1%	1.1%	1.0%
Divorced/Separated	0.6%	0.9%	0.3
Female			
Widowed	8.5%	8.5%	8.5%
Divorced/Separated	1.3%	1.2%	1.4%

Source: Bangladesh Sample Vital Statistics 2015; BBS, May 2016, p-19

Among the total elderly people, whether the marital status is observed, which is very much keen to know their living status; as information, 1.1% male age-old people are 'widowed' (rural-1.1% and urban-1.0%) whereas 'divorce/separated' are 0.6% (rural-0.9% and urban-0.3%). For female age-old people, this figure is

© 2018 Global Journals

'widowed' 8.5% (rural-8.5% and urban-8.5%) and divorced or separated represents 1.3% (rural-1.2% and urban-1.4%)

b) Thought behind the study

In recent days, it creates deliberation on age-old people's rights, and search the way out for their faced crisis. Different kinds of literature claimed, they have faced sufferings in their daily lives by violation of their rights. Literary, age-old people are treated as honorable one, but in reality, their rights are violated and ignored both in family and society, especially those who live below poverty line. Though 'safety net program' makes an initial safe umbrella for them, but the numbers are very few who enjoy the facilities. Nonetheless, most of them have fully or partially deprived of their basic rights; and female have a special consideration. It means, it has gender dimension also. This study tries to understand the real-scenario with micro-lenses at the rural area and delve the situation with emphasis the 'social aging'[2] than biological aging. One of the thrusts of this paper to identify how society fails to consume them in the streaming of social fabrication. For fulfilling the objectives, this study has conducted in one union under Moheshpur sub-district of Jhenaidah district, Bangladesh to understand the situation in-depth qualitatively.

c) Study Objectives

- To know the study population's present living situation including food and health.
- To collect information on their deprivation and helplessness.
- To identify why family and society fails to facilitate them
- To search suggestions and recommendations for the betterment of age-old people.

II. Methodology

For conduction of the study, the Qualitative method was used. Case Study has taken as a method to delve the living situation of the Age-old People's, taken under this study. And twenty-five Case studies were done where twenty-three from rural areas and two from an Old-Homes, Jessore, district town. Here it is mentioned, Oral testimony[3] was used in this study also as a technique that was introduced by Panos Institute of London. According to the Panos (2003), 'Oral Testimony' describes the results of free-ranging, open-ended interviews around a series of topics, drawing on direct personal memory and experience. And through these techniques, it tries to understand the complex cycles of aging and how it impacts on the age-old people lives as like food, social, financial, medical, the helplessness that they have faced in their lives. Without any interfere, collect the information as their voices. Considerable manner that has followed as like Provide additional understanding and knowledge of complex issues and situations;

- Their direct and personal nature is n raising awareness and bringing development topics alive are a means for communities to document their (otherwise unrecorded) history;
- Amplify voices of marginalized individuals and communities;
- Can be a more democratic way of collecting information from people compared to other methods of data collection.

The purposive sampling has used to better interest of the study that met the objectives. Additionally, it concerned on those who were not under any assistance package as like safety net or aid when confirmed them to take this study. Two consultation meetings have held with local elites who contributed in response to the age-old people's sufferings regarding the steps that help to make recommendations in line with the policy formulations.

Table 3: At a Glance: Respondents' age*, sex and residence status

Residence	Male	Female	Total	Living Status
Rural				
Village-01	3	3	6	Three are living with son's support, two female supported by daughters and rest of living with life partners. And two widow living alone without any kin's support. Only three is coverage under government safety-net program.
Village-02	8	2	10	
Village-03	2	3	05	
Village-04	1	1	02	
Urban				
Urban-01	2	….	02	Two age-old males are living in an old home who enjoying three square meal in a day and medical facilities those are supported by Rotary Bangladesh.
Total	16	9	25	

** All respondents are more than 60 years old*

[2] Social aging is a multidimensional and dynamic force. It includes the transition into and out of roles, expectations about behavior, societal allocation of resources and opportunities, negotiation about the meaning and implications of chronological age and the experience of individuals' traveling the life course and negotiating life stages (Morgan and Kunkel, 2001).

[3] While the word testimony can have a legal meaning, Panos uses it sociological study that to describe the results of free-ranging, open-ended interviews around a series of topics, drawing on direct personal memory and experience. In 1928 already, the sociologist William Thomas came to this conclusion, saying that: *« if men define situations as real, they are real in their consequences »*. Judging what is true or false, good or bad, beautiful or ugly, useful or useless, is a cultural process, bound and full of specific pathways through time and space. Given the many differences in cultures, generations, class and between rural and urban settings, it is very important to train students in the complexity of people's perception of history and change.

© 2018 Global Journals

III. Findings

It has found that on nine variables, most of their status is very poor and these indicate their insufficient gaining to life leading. The achieved information also indicated few new information and reality that is very crucial. Findings have disclosed, describe here in a short manner with clarification.

a) Regarding Family Support

Out of 25 case studies, only six are living with their families that facilitated with elder son's families. Out of this, nineteen age-old people have been suffering for supported living. And lead their lives either alone or partial support as like by their daughter. In fact, many families and persons are around them, but no one with them in real. As per testimony, daughters are more helpful than sons, and few of them said, "daughter is more beneficial than son". When it has seen among the females, widows are more vulnerable regarding family support. They are fully alone both physically and socially. One informed, she has three sons and no daughter, but no son looks after her. As her verdict, "if she has a daughter, probably might be got support from the daughter". If it has considered on "family support", their situation is very deprived.

b) Regarding Financial Security

This is very crucial fact for the age-old people that most of them are living without minimum financial or monetary support. The irony of fact, when they have interviewed, even most of them have no money in their houses. As Bangladesh per capita income, it is 2200 US dollars when conducted the case study, but as that accounting, they are under the poverty line. And due to age limit, they have no earning capacity as well no sources also.

On gender consideration, a female is also identified as vulnerable. They are mostly under intersectional cycle[44] which is more discussed issue at present in Gender Science. One female widow who has two sons but live alone without any money and she has no fixed earning also. During the study, the study team found, they are facing financial crisis all time; if they have siblings. By this study it is known, age-old females are more sufferer than males.

c) Regarding earning status

None of the respondent has fixed income, and all of them are totally or partially dependent on others. Most of them depend on sons and daughters; few are also of neighbors. For the male, it has found that two male age-old operates a grocery of their sons and other are out of income-earning activities. Three females have also depended on neighbor's cash or kind supports. The non-earning position thrushes them into an inhuman situation inside family and society that is related to psychological obstruction.

d) Regarding Food in-taking

Food is a right for any being universally. For this study, a very undesirable food-in-taking scenario has been found. Among twenty-five age-old people, out of two who are in Old Home, Jessore city; most of them have failed to take three-square meals in a day. In our study, it has taken last seven days food-in-taking picture that is like as this.

Table 4: Food-intake in a week

Days	Three Square meals per day	Two or one square meal per day
1st day	Male=5, Female=1	Male=11, Female=8,
2nd day	Male=3, Female=4	Male=13, Female=3, 2 taken one meal
3rd day	Male=5, Female=1	Male=11, Female=8
4th day	Male=6, Female=3	Male=13, Female=5, 1 taken one meal
5th day	Male=5, Female=2	Male=11, Female=7,
6th day	Male=3, Female=1	Male=11, Female=3, 5 taken one meal
7th day	Male=5, Female=2	Male=11, Female=3, 4 taken one meal

e) Regarding Health support

For any age-old person, health is all time bothering factor. According to the collected information, all the studied age-old persons have deprived of any kind of health support irrespective of male and female. At present, one female is very sick, but no one takes care her though she has two sons. Most of the males are suffering from a cough, heart diseases, and sickness. Alternatively, females are suffering from a de-generational problem that related to after menus status. They have a headache, eye-sight problem and hyper-tension. Besides, age-old females are under high blood pressure. The more important thing is, they are out of medical treatment, in a sense. Because few of them have taken treatment from the bare-footed doctor, but most of them are either out of treatment or visited a traditional healer. As a citizen, they are fully deprived of all types of health facilities.

f) Regarding Social support

Might be it is ignored or partially treated in our elderly literature especially in Bangladesh. In query this, two criterion it has been followed as 'social support'; these are 'kin support' and 'neighbor support'. As revealed information, if few are enjoying the kin support but at present neighbor's support are very rare for aged people. One expressed with a sigh, "previously we honored our old people, but at present, no one honor us, even not asking 'how are you". For the female, very few are supported by their families and neighbors.

[4] Intersectional analysis aims to reveal multiple identities, exposing the different types of discrimination and disadvantage that occur as a consequence of the combination of identities.

© 2018 Global Journals

Table-5: Social Support Scenario: Collected by the Study

Category	Kin/Family	Neighbor	Government	No support
Male	Four are fully/partially supported by daughters Two supported by sons	Three supported by neighbors	Three supported by safety net	Four are out of any support
Female	One supported by sons	Two supported by neighbors	Two supported by safety net	Four fully out of any assistance

By the analysis, it has only considered the social support; and seen society and family are fail to provide the poor age-old people who have a significant contribution to their family as well as society. In their opinion, modern education and awareness could be not helpful for them; rather traditionalism is better than culture.

g) Gender consideration

As it measured through 'Gender Lens'; both genders are passing their days under the inhuman situation. But in this respect a female is taken much concentration; as testimony and group discussion, it has known female who are the widow and no kids are mostly vulnerable. Additionally, among twenty-five respondents who have no 'daughters' are more helpless than those who have 'sons'. Like this study, daughters are considered more helpful as an agency for their parents.

h) Intersection character in Aging

At first, it needs to feel without a total support the age-old people have not secured in their life. Intersectional character is another lens to understand the problem as a whole. 'Intersection' allows us to understand one another on a broad spectrum, instead of 'one trait'. For the present study, it has revealed that no single cause is liable for their unprotected living where many causes working behind the problems. It also presents through a diagram here.



Figure-1: Diagram of Identified Causes

As an institutional failure, 'insufficient public initiatives' is the core problem for age-old people's sufferings. Government fails to expand and implement the safety net facilities for the poor-aged-people and even for female also. Though Bangladesh claims, she is now developing country, but reflection is not vivid in this area. As like this, 'lack of financial opportunities' is another shortcoming for two considerations. One is no grant or gratuity for the age-old people though now very few grants are offered by the government to the rural poor and distressed, the monthly allocation is not more than present ten kilograms rice price. Secondly, Micro Finance Institutions (MFIs) are not interested to provide sufficient financial support whether they should provide credit or grant for the age-old. Besides, These NGOs are also least interested to introduce any financial grants under Social Corporate Responsibility due to lack of budget. Due to lack of NGOs interest to facilitate the age-old poor people, it has also treated as lack of financial opportunities. But many age-olds want to do something that is soft-activities if these NGOs provide them capital money. This is also same for the private sector that means business corporate and financial corporates like the bank and other agencies. In this nexus, 'social poverty' badly impacts on the age-old people. Here it means, supports and assistance that has given by family, kin, and neighbors that is called society. It also related to 'relationship nexus'; that is identified as social capital in this sub-continent by many scholars. But the irony of fate, nuclear family, over population growth and modernity impact negatively on the traditional social fabrication and produces an 'impaired social pattern' that is not helpful and does not facilitate the age-old people who contribute them previously for making a good society and nation.

a) In-circle and Out-circle nexus in age-old people

For previous institutional characters, age-old people are now living out-circle areas. We mention 'In-circle and Out circle terminology' that means secured area and non-secured area for the age-old people. If it has theorized through based on present study findings, it posturizes as like all the respondent's age-old people are living at present 'out-circle' areas that means 'no one with them'. But it needs to include them 'In-circle' area where all the facilities are available for them. Now the question how possible it and what approach is needed.

© 2018 Global Journals

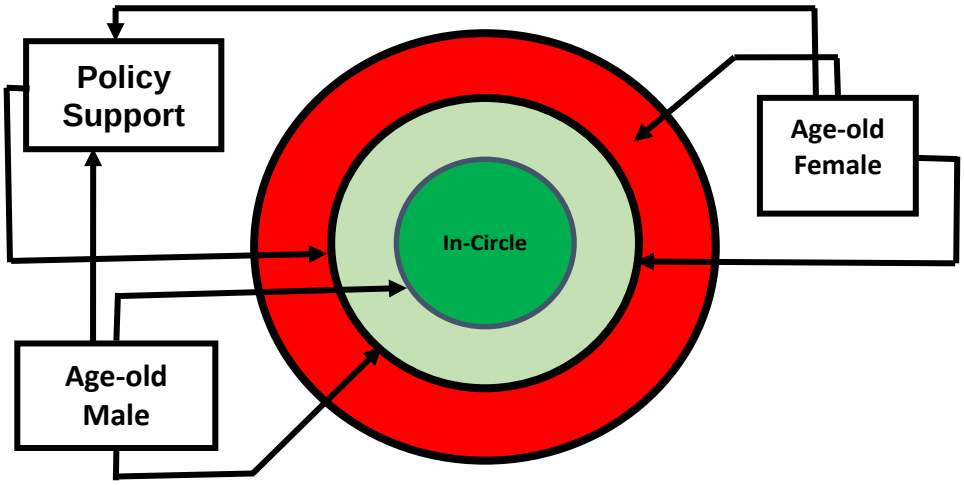

Figure-2: In-Circle Out-Circle Diagram

Probably, public-private agencies should play effective role mostly. Out of this, society can provide all types support for their parents; that is a social fabrication. Family and kin are key-agents in this regard. Besides neighbors are also be careful with them. Social awareness should have increased for breaking the cycle of social barriers. And it needs immediately. Based on present study, the age-old people commented for their financial security and health facilities first that means it needs to enact and implement the age-old sensitive policy and activities that reach the rural people institutionally, to transform the people of 'out-side circle' into 'inside-circle'. Proper policy needs to be enacted and implemented to the proper areas.

IV. Observation From done Testi Monies

a) Humanitarian Issue

Context: Considering the overall situation of age-old people, it has commented that they are living under severe problems including all types of security as food, health, cash and social assistance. In a nutshell, they are under inhuman situation mostly.

b) Recommendations

- All age-old should have taken under safety net program or any assistance.
- Primarily, attention should have emphasized on food and health care.

V. Familial and Kinship Response

Context: As traditional norms, the family has a responsibility to take care of their age-old people. But for the studied people, family fails to provide them food and health security as their primary basic need due to lack of access to any entitlement as assets and handful cash earnings that impacts on the age-old people who are living their family. For kinship assistance, daughters are more sensitive than the sons whether both are under poverty. Besides, testimony shows, female age-olds are more neglected by the in-laws as like daughter-in-laws, even sons also.

VI. Recommendations

- Need to concentrate on those family who assist the age-old and provides support to those households who take the responsibilities.

a) Social Justice

Context: Evidence shows clearly, society as like neighbors or villagers does not care the mentioned people at all. Not only that, even the local government representatives have not taken necessary action(s) in response to fulfill the needs of age-old people.

b) Recommendations

- It needs to ensure any obligation for the local government representatives of the age-old people.
- NGOs should be involved age-old issues within their social awareness programs.

c) Economic Security

Context: They have no economic security at all, 'no cash' is one of the problems. On finance, they are dependent on other persons.

d) Recommendations

- Cash should be given them on a monthly basis, and as public, private agencies should take care the age-old people.

e) Medical Assistance

Context: This is the most concerning issue, causing age-olds are suffering now many diseases but fail to take any healthcare due to lack of money and assistance them physically. In this regard, age-old widows are more vulnerable than the age-old male. In reality, experience gives an idea about few of them forget what health care is and it needs to them.

© 2018 Global Journals

f) Recommendations

- For this crucial issue and State should be more concern. Ministry of Health and Family Welfare should be taken it as their concern and may order to line institutions like UP based Family Planning and Community Clinic's for an open desk for the age-old people.
- All hospital/clinics/diagnostic centers (public/ private) should open special desk for age-old people.
- No prescription money will be taken by any Doctor (public or private) from the Age-old people who unable to pay.
- Medical tests and other referral treatments should be given them either full compensation or partial payment. It should take care to issue an immediate order in this regard.

g) Legal Status as Senior Citizen

Context: Experience initiates to enact related laws for them and declared them as Senior Citizen. If not, it is difficult to facilitate them just based on sympathy and pity.

h) Recommendations

- Age-old people treated as Senior Citizen, and package should have declared for them. Women should have taken more concerns in this regard.

i) On General Observation

Context: Observation shows, family members including present kin and in-laws have failed to carry out their duties to the aged people or partially. No local data have preserved on the age-old people in UPs.

j) Recommendations

- A Database should be completed by UPs and needs to be maintained it digitally that helps to access the age-old people information.
- Age-old people's issues should have included in primary and secondary level education curriculum that make the kids sensitive to the age-old people in future.

k) Policy Recommendations

- It should have introduced a 'special type of Card' for age-old people (as like NID Card) may be called as 'Elderly Card'.
- All the poor Age-old people (100%) should have covered under the safety-net program through a public-private partnership.
- Health facilities should have introduced for them through establishing Age-Old Desk in Hospital/Clinic both government and non-government Health Institutions.
- Poor Age-old Card-Holders should be provided free-treatment by the private hospital and clinic. And it needs to include new law(s) for this purpose.
- No Doctors can be taken any fees from the age-old people who own the 'Elderly Card'.
- Community clinic should have provided a service for Age-old people.
- Transportation should be free of cost for those who unable to pay, and it could be mandatory for all transports.
- It should have established at least one 'Old-home' for each Upazila by next five-year plan.

VII. Conclusion

Many issues of aging people have identified through this study. Finally, is revealed age-old are most vulnerable especially who are below poverty line. And based on the study, some recommendations have done, and if few numbers of these will implement in the near future, the age-old people will be benefitted and got rid of the inhuman situation.

References Références Referencias

1. Bangladesh Bureau of Statistics (2015). *Bangladesh Sample Vital Statistics 2015,* BBS, May, 2016.
2. Curran, J. and M. Renzetti. (1996). *Social Problems: Society in Crisis*. 4th Edn., Allyn and Bacon, USA.
3. Gorman, M. (2000). Development and the Rights of Older People. In: *The Aging and Development Report: Poverty, Independence and the Word's Older People*, Randels, J. *et al*. (Eds.). Earthscan Publications Ltd., London, 3-21.
4. Hossain, Md. Ismail, Akhtar, Tahmina and Uddin, Taj Md. (2006). The Elderly Care Services and their Current Situation in Bangladesh: An Understanding from Theoretical Perspective. *Journal of Medical Sciences, 6: 131-138.* Avaiable from: http://scialert.net/abstract/?doi=jms.2006.131.138 [Accessed 28th June 2017].
5. Hossen, A. (2005). The situation of the elderly women in Bangladesh: A struggle for survival in the later life. *Indian Journal of Gerontology*, 19: 81-100.
6. Kabir, H. (1994). *Local Level Policy Development to Deal with the Consequences of Population Aging in Bangladesh*. United Nations, New York.
7. Mcpherson, B. (1991). *Aging: The Middle and Later Years, An Introduction to Sociology: The Social Order*. 2nd Edn., Mcgraw Hill Ryerson Ltd., Canada.
8. Morgan, L. and S. Kunkel. (2001). *Aging: The Social Context*. Pine Forge Press, California, USA.
9. Panos Oral Testimony Programme, Panos Institute, London, (2003), *Giving Voice - Practical Guidelines for Implementing Oral Testimony Projects*.

© 2018 Global Journals

Global Journal of human-social science: C
Sociology & Culture
Volume 18 Issue 1 Version 1.0 Year 2018
Type: Double Blind Peer Reviewed International Research Journal
Publisher: Global Journals
Online ISSN: 2249-460x & Print ISSN: 0975-587X

Assessment of Social Factors that Influence Residential Area Preference in Otukpo Town, Benue State. Nigeria

By Christopher Owoicho & Jonathan Ali Ogwuche

Benue State University

Abstract- The study assessed the social factors that influence residential area preference in Otukpo town of Benue State, Nigeria. Variables considered based on households' characteristics and used for the study include: sex, age, marital status, household size, educational level, safety of neighbourhoods, and availability of school, power supply, water supply and public transport. Three sampling techniques were employed for the study. First stratified sampling technique was used to stratify the study area into eleven (11) residential areas; secondly, systematic random sampling was used in which one household head was selected based on the skipping ratio of four (4) per interval. A total of 400 households were selected and administered questionnaire, but 386 households returned their questionnaire. The data collected for this study was analysed using factor analysis because of its ability to reduce large variables to manageable factors. Using factor analysis based on Kaiser Principle, two factors were extracted using the variable maximization method with Eigen values of 8.76, and percentage contributory variance of 79.614%.

Keywords: *residential area preference, social factors, otukpo town, benue state.*

GJHSS-C Classification: *FOR Code: 160899*



Strictly as per the compliance and regulations of:

© 2018. Christopher Owoicho & Jonathan Ali Ogwuche. This is a research/review paper, distributed under the terms of the Creative Commons Attribution-Noncommercial 3.0 Unported License http://creative commons.org/licenses/by-nc/3.0/), permitting all non-commercial use, distribution, and reproduction in any medium, provided the original work is properly cited.

Assessment of Social Factors that Influence Residential Area Preference in Otukpo Town, Benue State. Nigeria

Christopher Owoicho [α] & Jonathan Ali Ogwuche [σ]

Abstract- The study assessed the social factors that influence residential area preference in Otukpo town of Benue State, Nigeria. Variables considered based on households' characteristics and used for the study include: sex, age, marital status, household size, educational level, safety of neighbourhoods, and availability of school, power supply, water supply and public transport. Three sampling techniques were employed for the study. First stratified sampling technique was used to stratify the study area into eleven (11) residential areas; secondly, systematic random sampling was used in which one household head was selected based on the skipping ratio of four (4) per interval. A total of 400 households were selected and administered questionnaire, but 386 households returned their questionnaire. The data collected for this study was analysed using factor analysis because of its ability to reduce large variables to manageable factors. Using factor analysis based on Kaiser Principle, two factors were extracted using the variable maximization method with Eigen values of 8.76, and percentage contributory variance of 79.614%. These social factors include sex (.947), educational level (.947), marital status (.919), occupation (.906), safety of neighbourhood (.942), power supply (.829), availability of school (.918), water supply (.940) and public transport (.685). The study revealed a positive relationship between the factors and shows the extent to which these factors strongly influence residential area preference in Otukpo town.produce a number of significant parameters that define the factors which explain the social variation in residential area preference in Otukpo town. The study therefore concludes that residents' locate in the study area where urban infrastructures are accessible, available and functional. The study therefore, recommends that basic residential infrastructures such as pipe-borne water, electricity, shopping centres and schools are either not available or are in a state of disrepair. The relevant authorities are however, urged to build new ones and rehabilitate existing residential infrastructures in order to make the residential areas more attractive and conducive for healthy living. State and local government authorities should intensify the security network of their residential areas since individual efforts have proved less effective by positioning security personnel in strategic locations in the study area.

Keywords: residential area preference, social factors, otukpo town, benue state.

I. Introduction

The preference of where to live would appear to be determined by a combination of economic constraints and personal preferences. It is not possible for everyone to live where they would prefer, as competition for the most desired residential locations means that price limits the options available. Fortunately, this competition and the resulting restricted preference may be mitigated by variation between people in the residential areas and life styles which they prefer. Some may prefer an inner-city location, others remote one, and for many the intermediate area which offers the best reconciliation of competing benefits. In practice, the reasons for preference of residential location are probably mixed. They may include access to employment, business, educational, cultural or recreational opportunities, affordability, familiarity with one residential neighbourhood as a result of growing up there or emotional attachment to a place or a life style.

The preference for certain neighbourhoods over others in a city depends on the location of the area in relationship to where office or business and friends are found (Michelson; 1966). Other factors that influence residential preferences include assessment of housing costs, family sizes, qualitative housing units and environment. Furthermore, preference could also be influenced by the crime rate in an area, economic, social, professional or educational background of residents. A households' decision to choose a particular residential district could be due to socio-economic, cultural, administrative or purely psychological factors (Ogunjumo and Olatubara; 1997). Urban residential location models indicate that the determinants of households' choice of residence include income of the household making the choice, family size, population density, rent and transport cost (Alonso, 1964;). The general tendency of the poor people to live near the Central Business District (C.B.D) while the rich stay at the out skirts of the city has also been well documented. Also well documented in the literature is the general tendency of people to segregate based on income Urban residential location models indicate that the determinants of households' choice of residence include income of the household making the choice, family size, population density, rent and transport cost (Alonso, 1964;). The spatial segregation based on income has been shown not to be very significant in Africa. For instance, findings of Abiodun (1990) have shown that some particular or ethnic groups concentrate in certain parts of Nigerian cities.

Author α σ: Benue State University. e-mails: owychris@yahoo.com, Ogwuche.jonathan@yahoo.com

© 2018 Global Journals

This present study attempts to access the social factors that influence of residential area preference in Otukpo town of Benue State.

II. Study Area

Otukpo town in Otukpo Local Government is the head quarter of Otukpo Local Government and is the third largest town in the state after Makurdi and Gboko. The town lies between latitudes 7°0 and 7° 30N and longitudes 7° 30 and 8° 10E.

The area has marked wet and dry seasons, an indication of the kop pen's Aw tropical humid climate type. Rainfall is expected in April-May and lasts till November with peaks in June – July and September – October. Surface drainage of the area is poor as cases of flood are experienced during heavy down pour. The geology of Otukpo town- complex marine sediments made up of shale, sand stones and silt stones under lay, which offer poor infiltration and ground water storage encourages profuse surface runoff during rains. The fractures in the shale are not inter-connected. There is no clearly defined ground water level and even where found, the water table fluctuates between the wet and dry seasons. Based on this there are few or no exploitable ground water reserves in the area. The major rivers in the area are Okokoro, Edikwu, Otada and Ukplo. These rivers are highly seasonal and dry up in the dry season with some stagnant pools in their channels in dry season. This seasonality of the drainage system creates serious problems to inhabitants of Otukpo town, since most of the residents depend on natural sources for their water needs. The projected population of the town is estimated at 38,880 persons. The pattern of settlement is predominantly nucleated settlement with concentrated structures (See Fig 1.

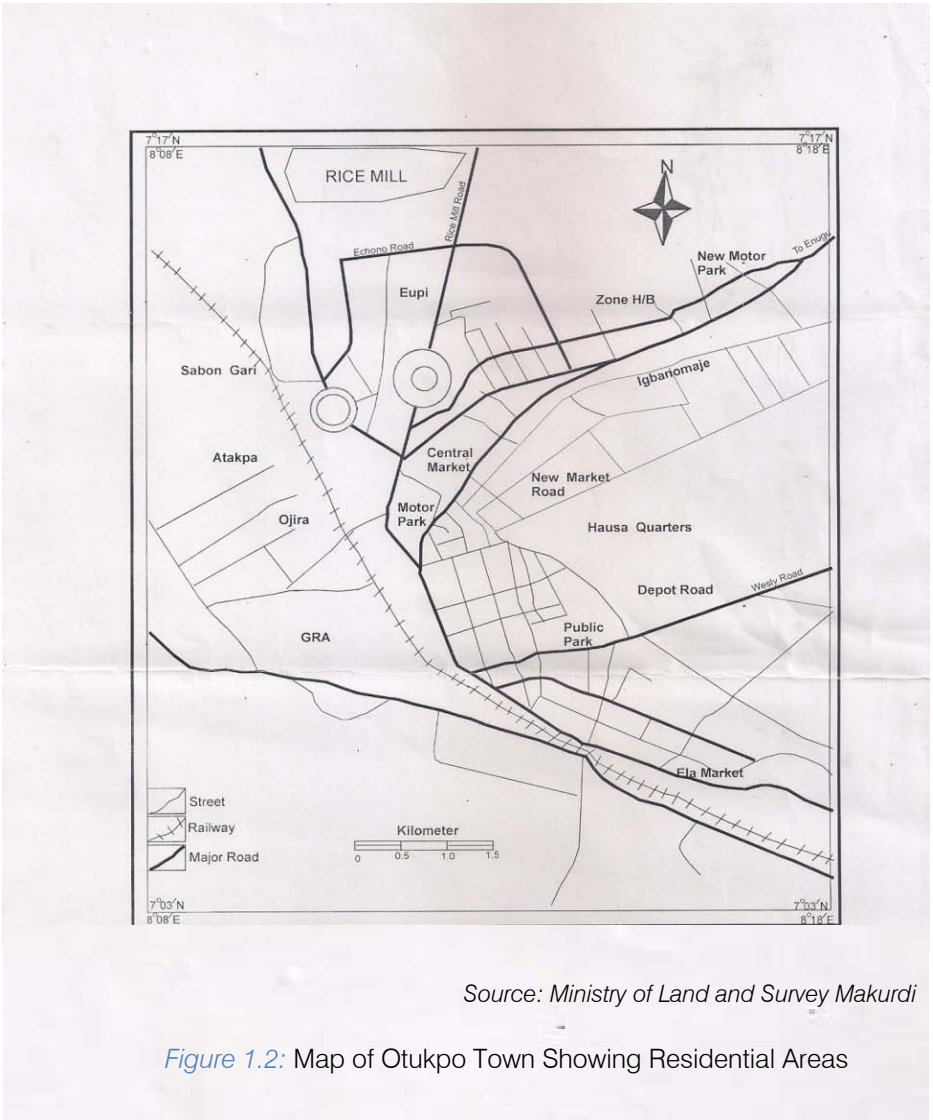

Source: Ministry of Land and Survey Makurdi

Figure 1.2: Map of Otukpo Town Showing Residential Areas

© 2018 Global Journals

III. Material and Method

Data on social factors that influence residential area preference were collected from 386 heads of households using questionnaire, interview and observation. In carrying out this study, residential areas of Otukpo town were stratified into eleven residential areas using stratified sampling technique. Systematic random sampling was used to select houses that questionnaires were administered, in a situation where a house selected happen to be a compound (yard), convenience sampling technique was used to administered questionnaire to the first head of household met in such compound. The parameters used for the study were defined as follows:

X1= Sex
X2= Age
X3= Marital Status
X4= Occupation
X5= Household Size
X6= Educational Level
X7= Safety of Neighbourhoods
X8= Availability of School
X9= Power Supply
X10= Water Supply
X11= Public Transport

Variables X1,X2,X3,X4,X5,X6,X7,X8,X9,X10,X11, were determined through the use of questionnaire. Factor analysis was used in summarizing and analyzing the data, as well as identifies the principal dimensions of the selected variables responsible for social residential area preference in the study area to identify their relative contributions in influencing residential area preference in Otukpo town. The factor analysis generated both the correlation matrix and the rotated factors matrix, in which only factors with Eigen- values above unity with 5% or more explanatory powers considered as separate orthogonal dimensions or factor components (Anyadike, 2009).

IV. Result and Discussion

a) Social Factors that Influence Residential Area Preference in Otukpo Twon

Table 1: Social Factor Matrix of Residential Area Preference in Otukpo Town

Variables	Residential Preference Factors		
	I		II
Sex	(.947)		-.165
Age	.154		-.014
Marital Status	(.919)		.138
Occupation	(.906)		-.235
Household Size	(.685)		(.505)
Educational Level	(.947)		.173
Safety of Neighbourhood	.193		(.942)
Availability of School	.225		(.918)
Power Supply	-.088		(.829)
Water Supply	-.158		(.940)
Public Transport	(.685)		(.505)
Eigen-value	4.82		3.94
% Variance	43.780		35.834
% Cumulative explained	43.780		79.614

Source: field work, 2015.

Table 1 shows the rotated social factor matrix of residential area preference in Otukpo town. Factor one (1) which has an Eigen- value of 4.82 accounts for 43.780 percent of the total variance. It has very high positive loadings on variables 1(sex), 3(marital status) 4(occupation), 5(household size), 6(educational level), and 11(public transport),. All these positive loadings touch on all aspects of socio-demographic characteristics of households, therefore, the positive loadings can be regarded as socio-demographic factor. Whereas the negative loadings on 9(power supply) and 10(water supply). The absence of these negative loadings in any residential area could influence the preference for such residential area. Factor two (2), which has an Eigen-value of 3.94 explains 35.884 percent of the total variance, has high positive loadings on variables 5(household size), 7(safety of neighbourhood), 8(availability of school), 9(power supply), 10(water supply) and 11(public transport). All these positive loadings touch on all aspects of urban infrastructures, therefore, the positive loadings can be regarded as access to urban infrastructures factor whereas, the negative loadings on 1(sex), 2(age) and 4(occupation). The absence of these negative loading variables in any residential area could influence the absolute neglect of such residential area. This is obvious in the slum areas of Ogwonu-Igbahapa, Zone H.B, Atakpa, Ojira and Sabon-Gari. Further interaction and

© 2018 Global Journals

observation during the field study revealed that availability, accessibility and functionality of social services influence residential preference in the study area.

V. Conclusion

This study has assessed the social factors that residential area preference in Otukpo town. The study has revealed that much of the social residential preference decisions in the study area owe much to availability, accessibility and functionality of urban infrastructures such as safety of neighbourhoods, power supply, availability of school, water supply, educational level household size and occupation. This is more obvious since the study has revealed that residents locate in the study areas according to accessible and functional infrastructures. The study therefore recommends that basic residential infrastructures such as pipe-borne water, electricity, shopping centres and schools are either not available or are in a state of disrepair. The relevant authorities are however, urged to build new ones and rehabilitate existing residential infrastructures in order to make the residential areas more attractive and conducive for healthy living. State and local government authorities should intensify the security network of their residential areas since individual efforts have proved less effective by positioning security personnel in strategic locations in the study area.

References Références Referencias

1. Abiodun, J. O. (1990). Issues in Urban and Regional Development in Nigeria. Nigeria: John West Publishers, pp. 25 - 42.
2. Alonso, W. (1964) Location and Use, Towards a General Theory of Land Rent. Harvard University Press, Massachusetts, USA
3. Engel; J.F. (1978). *Consumer Behaviour.* Hinsdale, Illiniois: Dryden Press.
4. Michelson W (1966). An Empirical Analysis of Urban Environmental Preferences. *Journal of the American Institute of Planners,* 37(6): 355-360.
5. Moughalu; L.N. (1982).*Consumer Satisfaction with Public Housing: A case study of Riverside Abakpa-Nike and Trans-Ekulu Housing Estates in Enugu, Anambra State*. M.Sc. Thesis (Unpublished) Benin: University of Benin.
6. Ogunjumo; A. and Olatubara; M. (1997). 'The Myth of City Centre Pivotal Influence in Urban Residential Location Decision: A study of Ibadan, Oyo State' Ife Research Publications in Geography, 6 (1&2): 26-35.

© 2018 Global Journals

Global Journal of human-social science: C
Sociology & Culture
Volume 18 Issue 1 Version 1.0 Year 2018
Type: Double Blind Peer Reviewed International Research Journal
Publisher: Global Journals
Online ISSN: 2249-460X & Print ISSN: 0975-587X

Engendering Social Exclusion: *Evidence from Slum of Narayangonj City Corporation of Bangladesh*

By Pratima Dev & Abu-Hena Mostofa Kamal

University of Dhaka

Abstract- Marginalization of certain groups or clans occurs in most societies including developed countries and perhaps it often occurs in under developed countries. Women, especially the slum women are far more excluded than any other groups in the society. It is clearly demonstrated that the number of slum dwellers is increasing day by day with the increased demand for employment opportunity, rapid rural-urban migration and rapid growth of urban population. The current study has expounded the nature of Social exclusion of women in the selected slums of Narayangonj city. Moreover, the study aimed to explore the reasons, causes, dimensions, impacts and pattern of exclusions for different socio-economic groups. This study had a critical outlook in examining the overall social-environment that perpetuated exclusion of women in slum areas. Findings of this study has presented a social exclusion index of three selected slums and a women poverty index in order to critically examine both the exclusion index and poverty index of women extensively. Finally, the study has examined the ineffectiveness/inaction of existing law and rules in protecting the disadvantaged women folk of slums.

Keywords: *social exclusion, engendering, women, slum, bangladesh.*

GJHSS-C Classification: *FOR Code: 370199*



Strictly as per the compliance and regulations of:



© 2018. Pratima Dev & Abu-Hena Mostofa Kamal. This is a research/review paper, distributed under the terms of the Creative Commons Attribution-Noncommercial 3.0 Unported License http://creative commons.org/licenses/by-nc/3.0/), permitting all non-commercial use, distribution, and reproduction in any medium, provided the original work is properly cited.

Engendering Social Exclusion: *Evidence from Slum of Narayangonj City Corporation of Bangladesh*

Pratima Dev [α] & Abu-Hena Mostofa Kamal [σ]

Abstract- Marginalization of certain groups or clans occurs in most societies including developed countries and perhaps it often occurs in under developed countries. Women, especially the slum women are far more excluded than any other groups in the society. It is clearly demonstrated that the number of slum dwellers is increasing day by day with the increased demand for employment opportunity, rapid rural-urban migration and rapid growth of urban population. The current study has expounded the nature of Social exclusion of women in the selected slums of Narayangonj city. Moreover, the study aimed to explore the reasons, causes, dimensions, impacts and pattern of exclusions for different socio-economic groups. This study had a critical outlook in examining the overall social-environment that perpetuated exclusion of women in slum areas. Findings of this study has presented a social exclusion index of three selected slums and a women poverty index in order to critically examine both the exclusion index and poverty index of women extensively. Finally, the study has examined the ineffectiveness/inaction of existing law and rules in protecting the disadvantaged women folk of slums.

Keywords: social exclusion, engendering, women, slum, bangladesh.

I. Introduction

One in every eight people living in slum all around the world and the projected number for 2030 is 2 billion (CBS News, 2003; UNHABITAT, 2008;Mahabir, R., Crooks, A., Croitoru, A. et al, 2016; Rashid 2009; Khan and Kraemer, 2008). Millennium Development Goal (MDG) targets to improve the standard of living of at least 0.1 billion people by 2020(Rashid 2009;Barrett and Dunn 2006). Key development issue of 21st century is to ensure sustainable health and human rights for people living in urban slums(Rashid, 2009). The lack of access into basic services make women and girls of urban slums to face stigmatization, inequity, administrative isolation and pass poor quality of life compared to their male counterpart in slums and others in the mainstream society (Radoki & Lloyd, 2002, Goswami, 2013).Women and girls have to perform invisible and double work burden (i.e. taking care of family members, ensure that the family members get meal every day, collecting potable water and getting rid of wastewater, etc.) inside their home(Goswami, 2013).Considering women's socio-economic and political status they are regarded as the most disadvantaged class in the society(Goswami, 2013). Due to traditional social norms and values very often girls are not sent to school. Women at their early age do not have access into everyday city life which make them anxiety prone and distressed (Goswami, 2013).The unhygienic environment, denial of basic rights (education and health care) stunted women's mental and physical growth from a very early age (Goswami, 2013). In addition, socio-economical and physical insecurity, feminization of poverty, unequal distribution of income and opportunities, sexually abuse and culturally conditioned practices causes adverse impact on health and standard of living of female slum dwellers (Goswami, 2013). According to the constitution of the People's Republic of Bangladesh (1972) government is responsible for creating an environment for its citizen so that they can improve their lives through access to basic services, like health, education, etc. (Rashid 2009). In spite of these proclamations and rapid growth of urban population, Bangladesh has no explicit or comprehensive policy on controlling urbanization and/or managing urban poverty (Barrett and Dunn 2006). As of 2015 some 30% of the total population of Bangladesh (over 160 million) lived in urban areas (The Daily Star, 2015) and urban growth rate was 3.5% annually (Rashid 2009). Moreover, the number of female slum dwellers was 1.09 million in 2015(bdnews24.com). It is evident from the national survey statistics that the number of slum populations have been almost doubled from 1.5 million in 1996 to 3.4 million in 2006(BBS,2006) reflects the nature of social exclusion of rural populations who have been forced to migrate in urban slum areas. The study population of Narayangonj City Corporation is no more exception of such trend. Although we refer Narayangonj as City Corporation, in reality, the area consisted of many thousands of households and sections within a larger contiguous area, and everyone referred to the larger area as Narayangonj. Therefore, the objective of this study was to explore socio-economic and political factors related to social exclusion of female slum dwellers. For instance, people who live in a slum may effectively be denied the opportunities for self betterment that most people in society have. It focuses attention on a broad range of factors that prevent individuals and groups, especially the women. The study also aimed to explore the influence of poverty on exclusion.

Author α: PhD student of Institute of Disaster Management and Vulnerability Studies, University of Dhaka.
Corresponding Author σ: Lecturer(Sociology), Department of Humanities, Khulna University of Engineering & Technology(KUET).
e-mail: mostofakamal@hum.kuet.ac.bd

© 2018 Global Journals

II. Methodology

The data have been collected from secondary and primary sources. To collect primary data from female slum dwellers regarding gender based social exclusion in slum both quantitative and qualitative research methods were used. Following convenience sampling method total 200 respondents were enrolled for face to face interview from three slums, namely *Rally Bagan*, Sweeper's colony and Rail line slum area under Narayanganj city of Bangladesh. A semi-structured survey questionnaire was used to explore the nature of social exclusion in slum and local people's perception about exclusion in slums. In addition, eight focus group discussions (FGD) and 10 case studies were conducted to investigate features of social exclusion experienced by female dwellers of the selected slums. Moreover, the closest contact (both participatory and non-participatory observation) with slum dwellers and participant observation of their challenging life enabled great objectivity of our research. Nonetheless, secondary data was collected and compiled from the books, reports, published and unpublished papers, leaflets, booklets, news paper, municipal records and governmental circulars and non-governmental circulars.

a) *Ethical Consideration*

The protocol was approved by internal faculty of Sociology department, University of Dhaka. Information has been collected in a neutral investigator.

III. Result and Discussion

The nature of social exclusion of women we found in this study has been determined in terms of patriarchal social structure and women's exclusion, political empowerment and participation, feminization of poverty, income and employment and access to health care services.

a) *Nature of Gendered Social Exclusion in Slum*

Based on questionnaires compiled from field surveys, the finding of the research illustrates the nature of social exclusion of female slum dwellers. Figure-1 shows that a great majority of the participants did not have proper access to health care services. Due to not having proper education, awareness and communication skill they did not even know the proper place from where they could get health care services and/or types of services they availed as a citizen. Findings of the study conducted by Raihan et al. (2014) showed that due to unhygienic living condition slum women frequently suffered from various types of diseases, like- headache, worm, skin diseases, diarrheal diseases, gastric, cough, fever, etc. and some women visited traditional healers for treatment due to not having access to health care services. Their study also indicated lack of awareness of the female slum dwellers in respect to health care seeking behavior. In addition, findings of the current study demonstrate that women of the slum were considered both physically and mentally weak to perform any major responsibilities. On the other hand, 90% of the total participants said that the female representatives of the local government had some signatory roles only; were not considered important while making major decisions. However, respondents also experienced lack of governmental support to act as potential entrepreneur (figure-1). Furthermore, gender neutral working environment is one of the significant indicators to measure women's social exclusion. Study conducted by Stamarski and Hing (2015) showed that the complex phenomena of gender based inequality or gender bias is deep rooted in culture and structure of organizations and institutions in the society. Forms of gendered inequality they found in their study were rooted in hiring, training, pay and promotion of women. Majority of the participants of this study experienced sexual harassment, impartial attitudes from higher authority for being female and even wage gap or income inequality was also prominent. Moreover, over half of the participants mentioned that they did not find liberty to do their assigned duties. Apart from the society, slum women were victim of physical and psychological hostility done by their family members. Along with all those exclusion women had to face patriarchal domination and maintain strong and sometimes unusual veil (*purdah*) system. *Purdah* is considered to be a form of religious practice among the Muslims and an instrument of social exclusion (Yusuf, 2014; Khan, 2014) which has great impact on women's accoutrements (Feldman and McCarthy, 1983) and participation in income generating activities apart from home.

© 2018 Global Journals

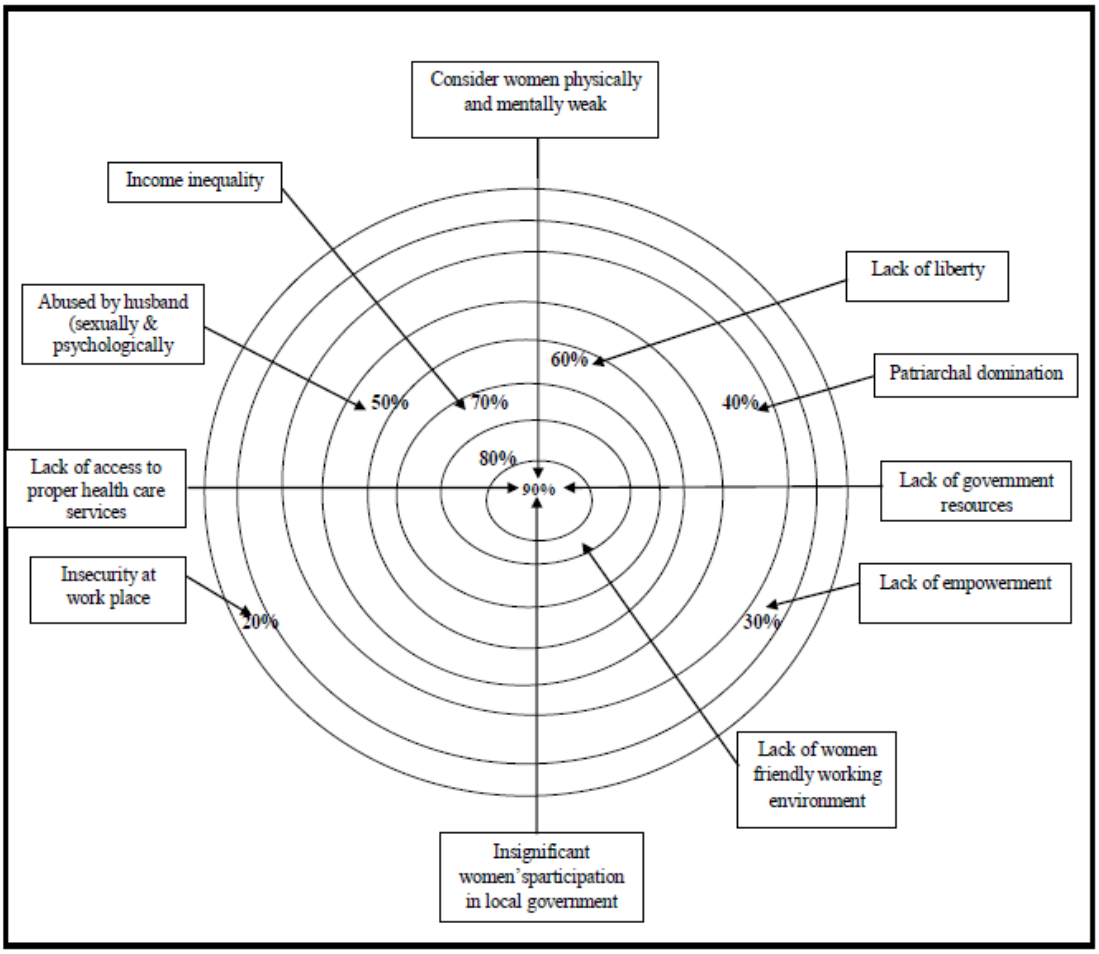

Figure 1: Nature of social exclusion faced by female slum dwellers

b) Access to Basic Services and Feminization of Exclusion

Slums are considered as spatial symbolization of urban poverty, social exclusion and improper urban governance policy (Sclar and Northridge, 2003). Slums are also characterized by poorly structured houses, poor environmental management, inhuman standard of living, etc (Harpham, 1986). As a human being and citizen of the country slum women should have access to basic services likewise people of all other sectors of the society. Slum dwellers, especially women does not have proper or adequate access to basic services, like health care services, access to political institutions and job opportunities (Unger and Riley, 2007). Findings of this study show that participants experienced irregular right to entry into basic services. For clear understanding and precise discussion we have categorized and summarised those sectors. First of all, we found patriarchy as a barrier for female slum dwellers to enjoy access to basic services. Participants mentioned that they were not able to contribute in family decision making. More clearly, their opinions regarding their family affairs were not given priority. A great majority of the participants opined that women were both mentally and physically weak to do hard task. So they were only responsible for doing comparatively easier and invisible works. Women's political participation has been considered as a key indicator of women's empowerment. Almost all the participants (99%) said that women's participation as elected member of the city corporation were not significant in terms of their contribution. They could not participate in decision making. They also reported that in spite of having institutional authority they were not able to solve local issues due to patriarchal societal attitudes. Some female ward commissioners (female representative at local city corporation) mentioned that they had only signatory roles while formulating major policy under City Corporation. Furthermore, findings of this study suggest that no woman from slum was representative at the city corporation. Emerging perception around the globe is that poverty is increasingly becoming feminized (Moghadam, V.M., 2005). The idea of feminization of poverty refers that percentage of women's poverty is disproportionate and linked with increasing incidence of female headed household (Chant, 2006). Findings indicate that wage disparity (almost half compared to men)between men and women, socio-cultural dogmas regarding women's engagement in income generating activities, disgraceful status of women in the society and

© 2018 Global Journals

inhuman living condition made slum women more subjugated in the society. A significant number of participants (70%) said that they were often harassed by their male colleagues in their workplace. A major disparity was observed in case of women's access to health care services. Slum women of the study area mentioned that they did not get their expected treatment for their residential status. Even male members of their slums received better treatment compared to them. In addition, female slum dwellers felt shy or embarrassed to share their problem with male physicians. Besides, instead of giving treatment in case of complicated health condition they were often asked to go to district level hospital (see: table-1).

Table 1: The Nature of Social Exclusion of Women

Patriarchy and women's exclusion	Political representativeness	Feminization of poverty	Income and employment	Access to health care services
No prominent role in decision-making (93%)	Insignificant representation as elected member of city corporation (99%)	Inhuman living condition (23%)	Discrimination in labor market in terms of wage and salary (74%)	Lack of preferential treatment in comparison to males (76%)
Subjugate in family (28%)	Insignificant representation in city corporation as ward commissioner (32%)	Strong prevalence of patriarchy (92%)	Patriarchy play dominant role in determining wage and salary (42%)	No support for complicated diseases (46%)
Lack of empowerment (24%)	Unable to solve the local people's problem due to lack of power and authority of female ward members (99%)	No liberty and freedom (36%)	Often harassed in work place (70%)	Unable to get proper treatment due to economic vulnerability (61%)
Verbally, physically, sexually, psychologically abused by husband (45%)	Not empowered for executing development program as female ward members (81%)	Despicable status of women (23%)	Females are paid almost half wages of males (74%)	Females can hardly consult with physicians for treating diseases (77%)
Consider women as weak both physically and mentally (93%)	Female slum dwellers does not have any representation in city corporation (76%)	Acute income inequality in comparison to males (74%)	Cultural and religious barriers in getting jobs (91%)	Hardly consult with physicians' regarding gynecological complications (93%)
No Liberty (38%)	Signatory role of female ward members in policy formulation (92%)	Cultural barriers in getting involved in income and employment (50%)	Not equally treated as male labors 15%	Infected with viral and contagious diseases due to lack of nutritional food (9%)
		Lack of subsistence level of occupation (25%)		Lack of access to health care services (93%)

Field Survey, 2014

c) Exclusion and poverty index

Urban growth is one of the key concerns worldwide, especially in the context of developing world. Funding organizations are emphasizing to address urban poverty and social exclusions in slum in order to equalize (Alamgir, 2009). To indicate the social exclusion indicators more clearly, we have formulated an exclusion and Poverty index following Gordon PSE Survey in Britain (Pantazis, C., et al., 2006). Empirical evidence of social exclusion and poverty index of slum women has been summarized in the following table:

© 2018 Global Journals

Table 2: Analysis of exclusion and poverty index

Exclusion Index			Poverty Index		
	Response (%)		Lack of items which make not to be poor (%)		Adults women
Experiences	Yes	No	No	Yes	
Perception about being poor	100.0	0	50.0	50.0	Own house
Perception about being excluded	65.5	34.5	100	0	Households furniture
Freedom in any sphere of life	56.5	43.5	100	0	Refrigerators
Unpaid worker in family	44.5	55.5	100	0	Telephone
Employment opportunity play important role to reduce exclusion	100.0	0	35.0	65.0	Television
Shopping facilities	84.5	15.5	35.0	65.0	Satellite connection
Watch cinema / theatre or visit museum	52.0	48.0	82.5	17.5	Cassette player
Library facilities	0	100	42.5	57.5	CD player
Three meals in a day	39.5	60.5	100	0	Car
Hospitals	15.5	84.5	100	0	Ownership of motorbike
Post office	78.0	22.0	50.0	50.0	Camera
Corner shop	90.0	10.0	100	0	IPS /generator
Co-operative society	47.5	52.5	72.5	27.5	Charger light
Gas	26.0	74.0	73.5	27.5	A fan at home
Electricity	26.0	74.0	100	0	Carpets in living room
Water	24.0	76.0	100	0	Replace worn out furniture
Help with caring responsibilities for children / Aged / disabled.	84.0	16.0	100	0	Daily news paper
Someone to look after home	57.0	43.0	15.0	85.0	Mobile
Someone to talk if depressed	46.0	54.0	32.5	67.5	New clothes in every month
Disengagement in voting system	0	100.0	77.5	22.5	Having trendy cloths
Threat in voting system	89.0	11.0	77.5	22.5	3 Pair of shoes
Women group or organization in the locality	0	100.0	100	0	Wrist watch
Feel unsafe walking alone in the area after evening	79.0	21.0	85.0	15.0	Meat fish, fruits or vegetable every other equivalent day
Satisfaction with the area as a place to live	8.0	92.0	100	0	A meal in restaurant in every week
Noisy neighbours or loud parties beside home	18.0	82.0	35.0	65.0	Visit friends or relatives
Rubbish lying around home	67.0	33.0	47.5	52.5	Celebrating especial occasions (Eid, Puja etc.)
Poor street lighting in locality	37.0	63.0	62.5	37.5	Celebrating weeding day /birth day etc.
Street noise (traffic jam, factories)	36.0	64.0	50.0	50.0	Attending weeding/ funerals
Lack of open public space	65.5	34.5	92.5	7.5	Gifts to friends / family once a year
Get political aims if needed.	0	100.0	65.0	35.0	Hobby or leisure activity
Experiencing in recording case doing in police station.	0	100.0	90.0	10.0	A good job
32. Received govt. Allowance	0	99.5	34.0	66.0	Regular monthly savings
Satisfaction with the education system in locality.	31.0	69.0			

Source: Field survey, 2014

© 2018 Global Journals

In the above analysis we have divided social exclusion index of slum women in 3 broad categories:

1) Exclusion from labour market
2) Exclusion from services
3) Exclusion from social networks

The most significant indicator of women's poverty was found in their domestic and/or household level which indicates that 50 percent respondents did not have their own house. They lived in rent houses made up of old clothes, Plastic and bamboo. During rainy season they often could not sleep at night and their poor houses became submerged with water. About 85 % of the total respondents mentioned that they could not eat nutrias food. All most all the respondents reported that they did not have access to modern technological devices, like- refrigerator, gas woven, telephone, motorbike/car, camera, CD/DVD player, etc. In contrast, a great majority of the respondents (85%) had access to mobile phone. Findings show that respondents rarely visited their relatives and friends house or went outside (park, restaurant, etc.) home for recreation. On the other hand all the respondents opined that equal working and/or income opportunities might reduce social exclusion in slum. 69% of the respondents mentioned about their dissatisfaction regarding the existing education opportunity for slum dwellers. Besides, their living place was reported to be unhygienic and inhuman.

IV. Conclusion

Women are most excluded section of the society though they represent half of the total population of the world. An overwhelming majority of urban poor lives in overcrowded slums. However, slum women lead awfully disadvantaged lifestyle (Raihan et al; 2014). The features of slum women of Narayangonj city corporations are no exception to it. This paper addressed the livelihood of slum women in Narayangonj city, a town about 17 km Southeast of Dhaka, Bangladesh. We tried to analyze overall exclusion pattern of the slum women. It is also evident from the findings that the tendency of social exclusion was highly related with poverty. It was also observed that exclusion of women was highly related with patriarchal society. The ultimate wellbeing of slum women is broadly conceived to include not only consumption of goods and services but also the accessibility of all sections of the population. It is necessary to improve physical infrastructure (e.g. providing education, ensuring equal access to health care service, creating gender friendly work environment and equity in income and distribution, and employment opportunity for slum women, etc.) and human capital of the slums. In addition, overcoming socio-political, cultural and economic constraints is also needed to reduce social exclusions for female slum dwellers. Here in this regard public-private partnership might be a potential initiative to ensure social welfare and establish good governance in the slum area. Overall, women's empowerment and freedom in the slums are utmost important to make them useful social capital to contribute in the national development.

Acknowledgment

This article is extracted from Master's Thesis of Pratima Dev, Bangladesh, and the authors would like to thank all those who have contributed to this article.

References Références Referencias

1. Alamgir, M.S., Jabbar, M.A. and Islam, M.S., 2009. Assessing the livelihood of slum dwellers in Dhaka city. *Journal of the Bangladesh Agricultural University*, 7(2), pp.373-380.
2. Barrett, A. and Dunn, K., 2006, June. Reaching the MDGs in urban Bangladesh. In *World Bank Workshop: Towards a strategy for achieving MDG outcomes in Bangladesh. Session* (Vol. 5).
3. Bdnews24.com, (2015) "Number of slum dwellers in Bangladesh increases by 60.43 percent in 17 years, available at: https://bdnews24.com/bangladesh/2015/06/29/number-of-slum-dwellers-in-bangladesh-increases-by-60.43-percent-in-17-years (accessed 30 November, 2017)
4. CBS News, 2003 (https://www.cbsnews.com/news/1-billion-live-in-slums/)
5. Chant, S., 2006. Re-thinking the "feminization of poverty" in relation to aggregate gender indices. *Journal of human development*, 7(2), pp.201-220.
6. Feldman, S. and McCarthy, F.E., 1983. Purdah and changing patterns of social control among rural women in Bangladesh. *Journal of Marriage and the Family*, pp.949-959.
7. Goswami, S., 2013. Gender, Slum and Society. *Global Journal of Human-Social Science Research*, *13*(5).
8. Harpham, T., 1986. Health and the urban poor. *Health policy and planning*, *1*(1), pp.5-18.
9. Khan, M.M.H. and Kraemer, A., 2008. Socio-economic factors explain differences in public health-related variables among women in Bangladesh: a cross-sectional study. *BMC Public Health*, *8*(1), p.254.
10. Khan, M., 2014. The Muslim Veiling: A Symbol of "Oppression" or a Tool of "Liberation". *Journal of the University of Manitoba Anthropology Students' Association*, *32*.
11. Moghadam, V.M., 2005. The 'Feminization of Poverty' and Women's Human Rights.
12. Mahabir, R., Crooks, A., Croitoru, A. and Agouris, P., 2016. The study of slums as social and physical constructs: challenges and emerging research opportunities. *Regional Studies, Regional Science*, *3*(1), pp.399-419.

© 2018 Global Journals

13. Pantazis, C., Gordon, D. and Levitas, R. eds., 2006. *Poverty and social exclusion in Britain: The millennium survey*. Policy Press.
14. Rashid, S. F. (2009). "Strategies to reduce exclusion among populations living in urban slum settlements in Bangladesh. *Journal of health, population, and nutrition,*27(4): 574.
15. Rakodi, C., with Lloyd-Jones T eds 2002. *Urban livelihoods; a people-centred approach to reducing poverty*.
16. Raihan, M.M.H., Islam, M.N., Rouf, A., Begum, A., Rahman, M., Murad, M. and Das, S., 2014. Health Care Situation of Migrant Slum Women: Evidence from Sylhet City of Bangladesh. *Bangladesh e-Journal of Sociology*, *11*(1).
17. Sclar, E.D. and Northridge, M.E., 2003. Slums, slum dwellers, and health.
18. Stamarski, C.S. and Hing, L.S.S., 2015. Gender inequalities in the workplace: the effects of organizational structures, processes, practices, and decision makers' sexism. *Frontiers in psychology*, *6.*
19. The Daily Star, (2015) "Bangladesh's urban population rising fast", available at: http://www.thedailystar.net/country/bangladeshs-urban-population-rising-fast-190063 (accessed 30 November, 2017).
20. UN-HABITAT, 2008, available at: https://unhabitat.org/slum-almanac-2015-2016/ (accessed 30 November, 2017)
21. Unger, A. and Riley, L.W., 2007. Slum health: from understanding to action. *PLoS Medicine*, *4*(10), p.e295.
22. Yusuf, E; 2014, Purdah: A Religious Practice or an Instrument of Exclusion, Seclusion and Isolation of Women in a Typical Islamic Setting of Northern Nigeria, *American International Journal of Contemporary Research*, Vol. 4, No. 1; January 2014.

© 2018 Global Journals

This page is intentionally left blank

© 2018 Global Journals

Global Journal of human-social science: C
Sociology & Culture
Volume 18 Issue 1 Version 1.0 Year 2018
Type: Double Blind Peer Reviewed International Research Journal
Publisher: Global Journals
Online ISSN: 2249-460x & Print ISSN: 0975-587X

Child Marriages in Shamva District of Zimbabwe

By Jeffrey Kurebwa & Nyasha Kurebwa

Bindura University

Abstract- Child marriage has far-reaching health, social, economic, and political implications for the girl and her community. It truncates a girl's childhood, creates grave physical and psychological health risks, and robs her of internationally recognised human rights. Ending child marriage requires the consent of all actors involved such as fathers, government, Non Governmental Organisations, religious, community, and tribal leaders. Qualitative methodology was used in the study. Purposive sampling and snow ball sampling were used to identify key informants and women who were victims of child marriages. Ending child marriage requires a multifaceted approach focused on the girls, their families, the community, and the government. Culturally appropriate programs that provide families and communities with education and reproductive health services can help stop child marriage, early pregnancies, and illness and death in young mothers and their children.

Keywords: *child marriage; child bride; marriage; young girls; child.*

GJHSS-C Classification: *FOR Code: 370199*



Strictly as per the compliance and regulations of:

© 2018. Jeffrey Kurebwa & Nyasha Kurebwa. This is a research/review paper, distributed under the terms of the Creative Commons Attribution-Noncommercial 3.0 Unported License http://creativecommons.org/licenses/by-nc/3.0/), permitting all non-commercial use, distribution, and reproduction in any medium, provided the original work is properly cited.

Child Marriages in Shamva District of Zimbabwe

Jeffrey Kurebwa [α] & Nyasha Kurebwa [σ]

Abstract- Child marriage has far-reaching health, social, economic, and political implications for the girl and her community. It truncates a girl's childhood, creates grave physical and psychological health risks, and robs her of internationally recognised human rights. Ending child marriage requires the consent of all actors involved such as fathers, government, Non Governmental Organisations, religious, community, and tribal leaders. Qualitative methodology was used in the study. Purposive sampling and snow ball sampling were used to identify key informants and women who were victims of child marriages. Ending child marriage requires a multifaceted approach focused on the girls, their families, the community, and the government. Culturally appropriate programs that provide families and communities with education and reproductive health services can help stop child marriage, early pregnancies, and illness and death in young mothers and their children.

Keywords: child marriage; child bride; marriage; young girls; child.

I. Introduction

Globally more than 700 million women alive today were married before the age of 18. More than one in three (about 250 million) entered into marriage before the age of 15 (UNICEF, 2014). Boys are also married as children, but girls are the most affected. Child marriage is a manifestation of gender inequality in society and reflects social norms that perpetuate discrimination against girls. The practice of child marriages is most common in South Asia and Southern Africa with ten countries with the highest rates found in these two continents (UNICEF, 2010). According to a UNICEF (2014) report, over 280 million girls alive today are at risk of becoming brides by the time they turn 18 if there are no efforts to reduce child marriage. This figure is likely to rise to 320 million by 2050 due to population growth. The total number of women married in child hood will grow from more than 700 million to approximately 950 million by 2030 and nearly 1, 2 billion by 2050. The number of girls under the age of 18 married each year will grow from 15 million to 16.5 million in 2030 to over 18 million in 2050 (UNICEF, 2014). A UNICEF report (2014) indicated that in Sub-Saharan Africa 39 percent of girls are married before the age of 18 while 31 percent of girls in Zimbabwe are married before the age of 18 putting the country among four southern African countries with the highest rates of girl child marriages. Child marriage predominantly affects girls who live in rural areas. Girls from poorest 20 percent of the households are more than four times likely to be married before the age of 18 than girls from the richest 20 percent of the households (UNICEF, 2016). A UNICEF (2015) report indicated that child marriages in Mashonal and Central province recorded 50 percent, Mashonaland West 42 percent, Mashona land East 36 percent, Midlands 31 percent, Manic land 30 percent and Bulawayo 10 percent.

In July 2015, the United Nations Human Rights Council (UNHRC) unanimously adopted a resolution to "eliminate child, early and forced marriages." The Sustainable Development Goals (SDGs) specifically includes the elimination of child marriage as one of its targets (5.3) within the broader goal of gender equality. International organisations and NGOs have invested in developing interventions that raise awareness about the negative consequences of child marriage, provide parents with incentives to postpone marriage for their children, and provide adolescents with new opportunities to acquire skills and alternatives to a traditional path of early marriage and early motherhood.

Despite the various international, continental, regional, and domestic legislations that prohibit child marriages, the practice is still rampant in rural Zimbabwe. A variety of reasons that include, poverty, protection of girls, fear of loss of virginity before marriage and related family honour, and the provision of stability during unstable social periods, lack of education, and discriminatory customary and religious norms are suggested as significant factors in determining a girl's risk of becoming married as a child (International Humanist and Ethical Union, 2007). All these reasons have a major impact on why this practice remains a constant international issue for women and girls. Examining the framework in which child marriage exists, including the causes and effects of the practice is important in assisting countries to institute and enforce meaningful laws and policies to eradicate child marriages.

a) Purpose of the Study

This study focuses on the context, causes, and effects of child marriages in Madziva Community in Mashonal and Central province of Zimbabwe.

II. Research Methodology

Qualitative research methodology was used in this study. It was suitable for this study as it managed to capture a myriad of perspectives on child marriage in Madziva community of Mashonaland Central province of

Author α: Bindura University of Science Education, Department of Peace and Governance, Bindura, Zimbabwe.
e-mail: jeffkurebwa2015@gmail.com
Author σ: SOS Children's Village International, Bindura, Zimbabwe.
e-mail: nyashagatsi86@gmail.com

© 2018 Global Journals

Zimbabwe. A case study design was adopted in order to produce a detailed analysis of the context, causes, effects and measures to reduce child marriages. The case study design was central to this research as it allowed the researcher to be actively involved with experts and women who had experienced child marriages. Madziva community was chosen because of its high prevalence in child marriages especially among the apostolic sects. A sample of 15 respondents was used in this study. Purposive sampling and snow ball sampling were used in identifying key informants. Respondents were drawn from Village Headmen; Zimbabwe Republic Police Victim Friendly Unit; Child Care Workers (CCW) from the Department of Social Services; Gender Focal Person from the Ministry of Women's Affairs, Gender and Community Development; Field Officer from a local NGO; members of the Johane Masowe Wechishanu Apostolic Church and the Apostolic Empowerment Trust; women who had experienced child marriages and child brides. Secondary sources included the various international, continental and domestic legislations on child marriages and previous researches on child marriages.

III. Theoretical Framework and Literature Review

This study is premised on the Gender Role theory by Connell (1987). The fundamental concept of the Gender role theory are the two different genders-male or a female. Men and women are taught about the meaning of their roles, accepted and unaccepted behaviour. Women are mainly viewed as submissive instead of being contributory. They are rewarded when acting according to their social roles while punishment is imposed for unacceptable behaviour. The theory refers to five different aims, namely;

(i) Analysing and differentiating the *person* and the societal *position attained*- Both women and men are socially entitled different positions in society. The position socially accepted for girls within the areas categorised by child marriage is simply being a mother and wife.

(ii) The actions allotted to the position- The child bride's primary task is taking care of the household in activities such as farming, cleaning, cooking and taking care of the children. Working outside the household is rarely a choice for the wife, but is often the duty of the husband who has to earn an income. Therefore, the girl tends to be very dependent on her husband for financial support. The girl is either the only wife or is in a polygamous marriage. Discontinuing school and caring for the household is also the norm for the girl. When the first menstruation sets in, the girl's sexuality is safeguarded and school is therefore usually not an option. The married child often experience loss of power over resources which are instead held by the husband. Divorcing from the husband is very difficult for the girl child due to disempowerment and societal norms and values.

(iii) The proper and anticipated behaviour accepted by society- The appropriate behaviour for a wife in a traditional household is fulfilling all the tasks expected. The wife is to be the 'other' one in contrast to her husband. She is expected to be fertile and give birth to a large number of children who will care for the parents when they grow older. The proper behaviour is to stay married to one husband and keep maintaining the current family traditions. These traditions are often of high importance to live by and are therefore prioritised by the community.

(iv) Involving people set in contrast- In this case, the people in contrast are the male and the female, husband and wife. In most cases the wife is often very younger than her husband. This often causes the disempowered wife to be dependent on her husband.

Becoming a child bride usually has no package. Heavy responsibilities come along with being a young mother and wife. This can be very difficult for the girl who is put into adulthood before being emotionally or physically ready (Connell, 1987).

a) Understanding of Child Marriage

The Convention on the Rights of the Child (CRC) (1989) defines child marriage as marriage of a child under the age of 18. According to Parrot and Cummings (2008) a child marriage is a form of forced marriage. The two authors argue that children lack the maturity to understand the nature of marital relationships, what is expected of them and the ways in which child marriage affects them. They further argue that forced marriage is strongly associated with child marriage because full and informed consent is absent or considered unnecessary when it comes to the marriage. Parrot and Cummings (2008) differentiate forced marriage from arranged marriage by indicating that forced marriages involve coercion, mental and emotional abuse and strong social pressure. The two scholars further allude that in most extreme cases child marriage may also involve physical violence, abduction, false imprisonment, rape or sexual abuse and murder. UNICEF (2001) is more specific by defining child marriage as a formal marriage or informal union before the age of 18 that occurs throughout the world.

Mibang and Behera (2006) argues that the basic purpose of marriage is for procreation of children, continuation of society, fulfilment of biological needs and development of social ties among members of society. They define marriage as a union of man and woman to establish a family which is the basic unit of a society. Throughout the world, marriage is regarded as

© 2018 Global Journals

a moment of celebration and a milestone in adult life. However, in child marriage practices there is no reason for celebration. The imposition of a marriage partner upon a child means that a girl or boy's childhood is cut short and their fundamental rights are compromised.

Child marriage is one of the most destructive demonstrations of inequality and power imbalance between women and men (UNICEF, 2014). In most African countries, child marriage was regarded as a mechanism to protect girls from unwanted sexual advances and safeguarding their economic well-being. However, child marriage undercuts the very basis of what it was established to achieve, and generally results in a life of sexual and economic servitude for the girl (UNICEF, 2015). The devaluation and suppression of women's rights underpin the practice of child marriage and lead to serious psycho-social, economic and health consequences for the girl, her family and the society. Goody (1990) in his study of marriage patterns across the world highlighted a number of reasons why young girls are preferred for marriage in traditional societies. These include a longer period of fertility, obedience and docility. Such qualities are necessary for the bride to learn and accept the rules and ways of her new household. Child marriage is a form of oppression, and it perpetuates an inter-generational cycle of poverty and absence of opportunities. The child bride has a very limited support system due to her lack of education and isolation from her peers. She has few skills, limited mobility and constrained in her capacity to overcome poverty for herself, her children, and her family. Societies that tolerate and support the practice of child marriage thwart social and economic development (UNICEF, 2007).

According to UNICEF (2001), the practice of child marriage varies depending on a society's view of the family in terms of its role, structure, pattern of life, and the individual and collective responsibilities of its members. Ebenhoh (2004) explains that the idea of what constitutes a family and its function varies according to a country's social group. He argues that in most developed countries marriage takes place later in life because men and women marry as adults with experience of life and therefore a parental choice of a spouse is easily accepted. The practice of child marriage is furthered because many countries do not have a dependable system for registering births and marriages. This creates a further barrier to the enforcement of the legal age for marriage. Without a birth certificate, a child has no defence against age-related rights abuses such as child marriage. Unregistered marriages diminish a girl's capacity to use the legal system as a means of escaping the marriage she entered into as a child (Ebenhoh, 2004).

IV. Instruments and Legislations on Child Marriages

International, continental, regional and domestic instruments and legislations affirm child marriage as a violation of human rights. These instruments and legislations lay the norms to be applied to marriage. They cover issues of age, consent, equality within marriage, and personal and property rights of women. Some of these key instruments are analysed below.

a) *Convention on the Rights of the Child (CRC) (1989)*

Every provision of the CRC is of some relevance to the issue of child marriage. The most pertinent provisions relates to the definition of a child as any human being below the age of eighteen years (Article 1); the best interests of the child as a primary consideration in all actions concerning the child (Article 3); the right to express his or her views freely (Article 12); the right to protection from all forms of physical or mental violence, injury, abuse, maltreatment or exploitation, including sexual abuse (Article 19); and the right to health and to access to health services; and to be protected from harmful traditional practices (Article 24).

b) *African Charter on the Rights and Welfare of the Child (1990)*

According to Article 2 of the Charter, any human being below the age of 18 is a child. The Charter addresses issues of particular concern to children such as: the best interest of the child as the primary consideration in all actions concerning the child (Article 4.1); economic and sexual exploitation of children (Article 15 and 27); the right to parental care and protection 9Article 19) and; elimination of harmful social and cultural practices affecting the welfare, dignity, normal growth and development of the child (Article 21). Biologically, a human being is called a child between birth and puberty, while legally; a child is a minor person who has no legal capacity and mental maturity (Franklin, 2002).

c) *Constitution of Zimbabwe (2013)*

Section 81 on the Rights of the Children provides that:

1) Every child, that is to say every boy and girl under the age of eighteen years, has the right-

(a) To equal treatment before the law including the right to be heard;

(b) To family or parental care, or to appropriate care when removed from the family environment;

(c) To be protected from economic and sexual exploitation, from child labour, and from maltreatment, neglect or any form of abuse

(d) To education, health care services, nutrition and shelter

2) A child's best interests are paramount in every matter concerning the child"

© 2018 Global Journals

d) The Marriage Act [Chapter 5:11]

This type of marriage is contracted in a civil ceremony either at the Civil Courts or in church. Section 22(1) of the Marriage Act provides that a boy under the age of 18 and a girl under the age of 16 have no capacity to marry. However, a girl of 16 has the capacity to contract a valid marriage. She only has to obtain consent of her parents or legal guardians. Secondly a boy under the age of 18 and a girl under the age of 16 can obtain the written permission to marry from the Minister of Justice Legal and Parliamentary Affairs if s/he considers it to be desirable for the marriage to be contracted.

e) The Customary Marriages Act [Chapter 5:07]

This is one of the more archaic pieces of legislation. This law is problematic in that despite the law granting majority status to women and thus giving them full rights to enter into various contracts including marriage, the requirement regarding the payment of the bride price remains a part of this law and the fact that marriages contracted under this legislation are potentially polygamous. This Act does not stipulate a minimum age for marriage.

In a land mark judgement for children and in particular the girl child by the Constitutional Court of Zimbabwe on the 20th of January 2016, the Deputy Chief Justice (now Chief Justice), Luke Malaba declared the long enduring practice of child marriages uncon-s-titutional. The facts of the case were that two young women namely; Loveness Mudzuru aged 18 and Ruvimbo Tsopodzi aged 19 brought their case to court asking the Constitutional Court to declare the practice of subjecting girls to early marriages unconstitutional under the new constitution of Zimbabwe. In particular they wanted Section 22 of the Marriages Act and the Customary Marriages Act to be declared uncon-stitutional for failing to prescribe a minimum age for marriage. In making this request to the court, the two women relied on section 78(1) which they argued had the effect of setting 18 years as the minimum age of marriage. In passing its judgement, the Constitutional Court was called upon to make a determination on the constitutionality of long standing clauses on marriages that allowed parents to marry off their children.

V. Causes of Child Marriages

This section focuses on the findings of the study. In Zimbabwe the practice of child marriage is as a result of a range of different factors. The causes generally fall within the themes of poverty, lack of education, religious beliefs, cultural beliefs, gender inequality, family status, and poverty, lack of education, culture, and family ties and relationships and gender inequality. These factors are discussed below.

a) Poverty

Poverty was indicated as one of the major causes of child marriages in Shamva district. All the fifteen respondents highlighted on the negative impact that child marriage has such as a child's educational opportunities, health and hygiene, sanitation, and access to food. One Village Headman indicated that:

> "There is serious poverty in this community. Children are dropping out of school after completing their Grade Seven because parents cannot afford to send them to secondary school".

A Case Care Worker supported the above sentiments and opined that: "Poverty in this area has left many children vulnerable to exploitation by gold panners. In most cases parents are marrying off their children as early as twelve years. Poverty has disrupted family stability and abuse of young girls". Families that are unable to provide the needs of their children may offer their young daughters for marriage in order to ensure they are supported. A poor girl is often the most vulnerable and exposed (UNICEF, 2011).

b) Lack of Education

Key informants noted the important role that education plays in child marriage. They indicated that girls who had primary education or no education at all were more likely to be married as children than girls who had attained secondary education. An Officer from the ZRP Victim Friendly Unit summed it up: "When a girl child is in school, she is seen as a child by those around her than as a woman ready to be married".

A respondent from the Apostolic Empowerment Trust further noted the importance of education to girls when she noted that: "Going to school is empowering for girls. It enables them to develop skills and knowledge, forge social networks that equip them to communicate, and stand up for their interests. This lack of education also makes them vulnerable to domestic violence and abuse".

Educated girls are better able to contribute to their countries' growth and development, and also to the prosperity and well-being of their future families (UNICEF, 2016). When their education is cut short, girls lose the chance to gain the skills and knowledge to secure a good job and provide for themselves and their families and are socially isolated (UNICEF, 2016). Completing secondary school is very important for girls as this will reduce the risk of marriage before the age of 18. When given proper education, girls tend to enter marriage and deliver children later in life and give birth to a fewer number of children (UNICEF, 2011). Girls in rural communities may be withdrawn from school at first menstruation in order to restrict their movements and protect their sexuality. This is also linked to the belief that girls' education will, in the long term, adversely influence their future roles as wives and mothers. Having a mother without a proper education increases the

© 2018 Global Journals

difficulty of retaining her children in school. This causes further complications in a negative cycle (UNFPA, 2012).

c) Religious Beliefs

Madziva community is mainly dominated by members of the Johane Masowe Wechishanu Apostolic Church. The church has its own doctrine which promotes child marriages. This was indicated by one member of the church who said that: "We seek guidance from the holy spirit first before marrying. So if I am directed to a young girl, I have no option but to marry".

A woman from the church who was married at the age of fourteen supported the above sentiment by indicating that: "If you go against the 'Holy Spirit' you are threatened with certain curses such as barrenness. As a young girl you cannot stand against what the holy spirit would have directed prophets and church Elders." One CCW noted that: "Young girls from the church cannot stand up for their rights and when they get married they cannot demand safe sex or take part in family planning issues such as child spacing."

The association between religion and child marriage varies according to countries. According to the ICRW (2007) reports there is no correlation between a specific religion and child marriage across the world. However, various religions can have an impact on child marriage in different countries (ICRW, 2007). UNFPA (2012) in its report entitled: *Marrying too Young: End child marriage* indicated that religion has an impact on the prevalence of child marriage.

d) Cultural Beliefs

From the study it was noted that cultural values and beliefs are deeply rooted in the Madziva community. Most families that were engaging in child marriages considered it as a way of securing their child's future. One Village Headman noted that: "Child marriage is a way of securing a child's future and at the same time reduce the financial responsibilities on the family. There is also need to ensure that the child's virginity is maintained at the time of marriage."

A Gender Focal Person opined that: "Virginity is seriously valued in this community. It is considered an important part of marriage. The general belief in this community is that the younger the girl, the higher the chances of being a virgin. That's why cases of child marriages are also high in this community."

A research on child marriages in Indonesia and Nepal indicated that the social group with the highest amounts of child marriage cases were the most traditional (Kim, Thapa and Achmad, 2001). In some African cultures, a virgin is valued by her husband and honoured by his family. Culture may be associated with gender discrimination, family honour, safeguarding virginity, family prestige, among other factors (Bamgbose, 2002). Menstruation is also a part of child marriage in some communities since the girl is then considered being ready for carrying a child and is therefore considered an adult (UNICEF, 2001).

e) Gender Inequality

Gender inequality was also noted to be a contributing factor on child marriages. As noted by the GFP that: "Boys and girls experience life differently. They face different challenges which they must adjust to. These challenges include passing school, proving sexuality, engaging in different sports and physical activities, and associating with a social group of peers." A Field Officer from a local NGO also supported the above sentiments. She opined that: "Girls in this community endure child marriage, sexual discomfort, and domestic violence because of discriminatory gender norms that prevent them from considering the possibility of a different life. These social and cultural pressures that girl's experience leads them straight into the marital state. You will realise that for boys these pressures do not translate into child marriage."

VI. Effects of Child Marriage

A number of effects on child marriages were indicated by respondents. These ranged from psychosocial harm, health and reproduction, denial of education, domestic violence and effects on off springs. These factors are discussed below.

a) Psychosocial Harm

Psychosocial harm was indicated as the biggest challenge that is faced in child marriages. A respondent from the ZRP VFU noted that: "Early marriage has serious psychosocial and emotional effects that are detrimental to young girls. These effects results in loss of childhood, forced sexual relations, and denial of free will, and social development."

One CCW mentioned that: "These child brides experience high levels of depression, anxiety and feelings of hopelessness. Imagine they are forced to marry men whom they have never met and who typically are much older than them in some cases old enough to be their fathers." Key informants generally agreed on the high expectations that these child brides are expected to meet. These related to catering for their husband's demands, household chores, and giving birth to children of their own as soon as possible, compulsory sexual intercourse, domestic violence, and loss of freedom of choice, expression, and association.

b) Health and Reproduction

Key informants generally noted a number of challenges posed by child marriage that have a bearing on their health. One CCW summed it when she said: "Child marriage increases the prevalence of infectious diseases, malnutrition, high child mortality rates, low life expectancy for women, and an inter-generational cycle of child abuse." One woman who was a victim of child marriage mentioned that: "My first born child was

© 2018 Global Journals

underweight because I got married at the age of fifteen. I also lost a friend who died during giving birth because she did not receive adequate care during pregnancy. A GFP mentioned a number of problems that child brides face. She highlighted that: "Most of these girls give birth to underweight babies. Their children also suffer from malnutrition during their crucial stages of development." Another victim of child marriage mentioned that "As young brides we are susceptible to contracting diseases from our husbands such as Sexually Transmitted Infections (STIs)."

For young married girls early sexual intercourse and pregnancy usually follow with complications that can be fatal due to the undeveloped body (UNFPA, 2012). The young bride is also often isolated from family and friends and forced to stay home instead of attending school (UNFPA, 2006). Child marriage can even be the cause of death due to early pregnancy causing internal complications (Svanemyr, Chandra-Mouli, Sigurdson Christiansen, and Mbizvo, 2012). According to research conducted by Markle, Fisher and Smego (2007), the pressure that is inflicted by the social expectancy to give birth soon after marriage lead women to become pregnant before they are physically developed to carry a child.

c) Denial of Education

All the key informants noted that education was both a significant factor causing child marriage and a consequence of child marriage as well. One CCW mentioned that: "When parents decide to marry off their daughter it means they no longer want her to continue with school. Some of these girls are married off before even finishing their primary education." A Field Officer from a local NGO also opined that: "Preventing girls from continuing with their education, young brides are deprived of the opportunity to develop intellectually, prepare for adulthood, and contribute to the progress of their family and society."

Depriving girls of education has grave repercussions on society. Studies have shown that the education of girls increases incomes, which benefits families and countries alike, and reduces the number of children the girl will have. Education guarantees significant improvements in the health of their children, reduces the risk of HIV infection, decreases domestic violence, lessens the likelihood of harmful traditional practices, and on a broad scale has the ability to promote democracy and political participation (Herz and Sperling).

d) Domestic Violence

From the study it was noted that child brides are more vulnerable to domestic violence, and cannot make decisions about safe sex and family planning. A Village Headman mentioned that: "Child brides are at a higher risk of contracting STIs and HIV and AIDS, pregnancy and childbearing before their bodies are fully mature." The GFP supported this by indicating that: "I have noted in this community that girls who are married during childhood have a greater risk of experiencing domestic violence and abuse than women who marry as adults. Due to the uneven power dynamics, age differences, and the girl's dependency on her husband, young brides often lack the resources to escape from an abusive environment."

A common factor within child marriage is the great age difference between the girl and her husband. The husband often tends to be significantly older than his wife. Therefore, the girl is more likely to lose influence which sometimes results in domestic violence. In child marriage, lack of communication and understanding between the spouses can lead to violence and higher rates of divorce (Dean, 2016; Soguel, 2014).

e) Effects on Offspring

The responses from the study also showed that child marriage has an effect beyond the married bride. The next generations are also at a high risk of illnesses and deaths. The CCW mentioned that: "Adolescent mothers have a higher risk than older women for delivering infants who are preterm and of low birth weight. Deaths may also be as a result of young mother's poor health, immaturity, and lack access to social and reproductive services." The Field Officer supported the above sentiments by indicating that: "Babies are also at high risk of acquiring HIV and AIDS at delivery and during breastfeeding. Untreated STIs such as gonorrhoea, Chlamydia, syphilis, and herpes simplex virus infection can lead to premature delivery, congenital neonatal infections, and blindness."

VII. Conclusion

Child marriage is a serious human rights issue in Shamva district and most parts of Zimbabwe. By robbing girls of their potential, child marriage robs families, communities and nations of the contributions these girls might have made as women. Child marriage hampers countries' efforts to improve the health of mothers and children, fight malnutrition and keep children in school. When girls are married as children, they cannot help but pass on poverty, low education and poor health to the next generation (UNICEF, 2016). Child marriages have both physical and psychological consequences. From these consequences, girls are likely to experience psychological problems such as anxiety, which in worst cases can lead to suicide (Soylu, Ayaz and Yüksel, 2014). The devaluing of women and girls fosters the practice of child marriage and increase powerlessness and vulnerability of the child brides. Child brides often suffer from domestic violence, marital rape, deprivation of food, lack of access to information, education, and healthcare, and restrictions on mobility. Efforts to reduce sexual gender-based violence,

© 2018 Global Journals

advance education, overcome poverty, and improve health indicators have also been hampered by child marriages. Child marriage reinforces the gender implications of poverty and powerlessness, diminishing the physical, mental, intellectual and social growth of the girl and intensifying her social isolation. It also elevates the likelihood for Sexually Transmitted Infections (STIs), obstetric fistulas, maternal and infant mortality, and depression (Nawal, 2008).

While it appears that the legal framework to protect girl child from child marriages in Zimbabwe exists, a problem lies in the Customary Marriages Act which does not provide a minimum age for marriage and has therefore been abused. Zimbabwean authorities should amend or repeal all existing marriage laws that still allow child marriages and develop a Child Marriages Act to end child marriages. The Government of Zimbabwe should develop a National Action Plan (NAP) to empower girls. This will enable girls to value themselves, to know and exercise their rights, to develop skills to support their own life plans and to have opportunities to connect with their peers and support one another. This can be achieved through programmes that equip girls with training, skills, information, as well as the provision of safe spaces and support networks.

There is need for provision of adequate health, education, justice and other services, to remove the structural barriers that push girls into child marriage and prevent them from accessing support within marriage. These services range from providing adolescent-friendly health services, to ensuring that schools are accessible and child friendly, and to providing safe spaces and other support services for married girls. Civic organisations should mobilise families and communities as agents of change, by creating awareness of the harmful impact of child marriage, and of alternative roles for girls and women, so that families and communities prefer not to marry their daughters as children and so that they themselves take part in efforts to end child marriage.

References Références Referencias

1. Bamgbose, O. (2002). Legal and cultural approaches to sexual matters in Africa: the cry of the adolescent girl, *University of Miami International and Comparative Law Review* 127.
2. Connell, R. (1987). *Gender and power*, California: Stanford University Press.
3. Dean, L. (2016). Child marriage and divorce in Zaatari. www.lawfareblog.com (Accessed 10 February 2017).
4. Ebenhöh, U. (2004). *Family history: historical changes and regional differences on that what is called "family,"* Germany: GRIN Verlag.
5. Franklin, B. (2002). *The new handbook of children's rights: comparative policy and practice*, Routledge, New York.
6. Goody, J. (1990). *The oriental, the ancient and the primitive: systems of marriage and the family in the pre-industrial societies of Eurasia.* UK: Cambridge University Press.
7. Government of Zimbabwe (2013). *Constitution of Zimbabwe Amendment (No.20) Act, 2013*, Harare: Fidelity Printers and Refiners
8. Herz, B & Sperling, G.B (2004). *What works in girls' education: evidence and policies from the developing world*, New York: Council on Foreign Relations.
9. International Center for Research on Women (ICRW) (2007). *New insights on preventing child marriage:* A Global Analysis of Factors and Programs, April 2007.
10. International Humanist and Ethical Union (IHEU). (2007). Child marriage: a violation of human rights. www.iheu.org. (Accessed 20 March 2017).
11. Kim, M.C; Thapa, S & Achmad, S. (2001). Early marriage and childbearing in Indonesia and Nepal. *East-West Center* 108.
12. Markle, W.H; Fisher, M.A & Smego, R.A (2007). *Understanding global health,* New York: McGraw-Hill.
13. Mibang, T & Behera, M.C. (2006). *Marriage and culture: reflections from tribal societies of Arunachal Pradesh.* India: Mittal Publications.
14. Organisation of African Unity (OAU). (1990). African Charter on the Rights and Welfare of the Child. www.africa-union.org. Accessed 20 January 2017.
15. Parrot, A. & Cummings, N. (2008). *Sexual enslavement of girls and women worldwide,* Conneticutt: Greenwood Publishing Group.
16. Soguel, D. (2014). For Syrian refugees, early marriages end early. www.womensenews.org (Accessed 30 January 2017).
17. Soylu, N., Ayaz, M., & Yüksel, T. (2014). Early-married and sexually abused girls differ in their psychiatric outcomes. www.sciencedirect.com. (Accessed 10 May 2017).
18. Svanemyr, J., Chandra-Mouli, V., Sigurdson C.C & Mbizvo, M. (2012). Preventing child marriages: first international day of the girl child "my life, my right", end child marriage. www.reproductivehealth-journal.com. (Accessed 10 May 2017).
19. United Nations (1979). *Convention on the Elimination of all Forms of Discrimination against Women*, New York: United Nations.
20. United Nations (1989). Convention on the Rights of the Child. www.2ohchr.org. (Accessed 20 March 2017).
21. United Nations Population Fund (UNFPA) (2012). *Marrying too young; End child Marriage.*New York: UNFPA.
22. United Nations Children's Emergency Fund (UNICEF) (2001). *Early marriage: child spouses.* New York: UNICEF.

© 2018 Global Journals

23. United Nations Children's Fund (UNICEF) (2007). *The state of the world's children 2007: women and children, the double dividend of gender equality,* New York: UNICEF.
24. United Nations Children's Fund (UNICEF) (2016). *The state of the world's children 2016: A fair chance for every child.* New York: UNICEF.
25. United Nations Children's Fund (UNICEF). (2015). *The investment case for education and equity*, New York*:* UNICEF.
26. United Nations Children's Fund (UNICEF) (2014). *Ending child marriage: progress and prospects,* New York: UNICEF.
27. United Nations Children's Fund (UNICEF) (2011). At a glance: Niger. New York: UNICEF.

© 2018 Global Journals

Global Journals Guidelines Handbook 2018

www.GlobalJournals.org

FELLOWS

FELLOW OF ASSOCIATION OF RESEARCH SOCIETY IN HUMAN SCIENCE (FARSHS)

Global Journals Incorporate (USA) is accredited by Open Association of Research Society (OARS), U.S.A and in turn, awards "FARSHS" title to individuals. The 'FARSHS' title is accorded to a selected professional after the approval of the Editor-in-Chief/Editorial Board Members/Dean.



- The "FARSHS" is a dignified title which is accorded to a person's name viz. Dr. John E. Hall, Ph.D., FARSS or William Walldroff, M.S., FARSHS.

FARSHS accrediting is an honor. It authenticates your research activities. After recognition as FARSHS, you can add 'FARSHS' title with your name as you use this recognition as additional suffix to your status. This will definitely enhance and add more value and repute to your name. You may use it on your professional Counseling Materials such as CV, Resume, and Visiting Card etc.

The following benefits can be availed by you only for next three years from the date of certification:

FARSHS designated members are entitled to avail a 40% discount while publishing their research papers (of a single author) with Global Journals Incorporation (USA), if the same is accepted by Editorial Board/Peer Reviewers. If you are a main author or co-author in case of multiple authors, you will be entitled to avail discount of 10%.

Once FARSHS title is accorded, the Fellow is authorized to organize symposium/seminar/conference on behalf of Global Journal Incorporation (USA). The Fellow can also participate in conference/seminar/symposium organized by another institution as representative of Global Journal. In both the cases, it is mandatory for him to discuss with us and obtain our consent.





You may join as member of the Editorial Board of Global Journals Incorporation (USA) after successful completion of three years as Fellow and as Peer Reviewer. In addition, it is also desirable that you should organize seminar/symposium/conference at least once.

We shall provide you intimation regarding launching of e-version of journal of your stream time to time.This may be utilized in your library for the enrichment of knowledge of your students as well as it can also be helpful for the concerned faculty members.



The FARSHS can go through standards of OARS. You can also play vital role if you have any suggestions so that proper amendment can take place to improve the same for the benefit of entire research community.

As FARSHS, you will be given a renowned, secure and free professional email address with 100 GB of space e.g. johnhall@globaljournals.org. This will include Webmail, Spam Assassin, Email Forwarders,Auto-Responders, Email Delivery Route tracing, etc.



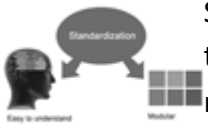

The FARSHS will be eligible for a free application of standardization of their researches. Standardization of research will be subject to acceptability within stipulated norms as the next step after publishing in a journal. We shall depute a team of specialized research professionals who will render their services for elevating your researches to next higher level, which is worldwide open standardization.

The FARSHS member can apply for grading and certification of standards of the educational and Institutional Degrees to Open Association of Research, Society U.S.A. Once you are designated as FARSHS, you may send us a scanned copy of all of your credentials. OARS will verify, grade and certify them. This will be based on your academic records, quality of research papers published by you, and some more criteria. After certification of all your credentials by OARS, they will be published on your Fellow Profile link on website https://associationofresearch.org which will be helpful to upgrade the dignity.



The FARSHS members can avail the benefits of free research podcasting in Global Research Radio with their research documents. After publishing the work, (including published elsewhere worldwide with proper authorization) you can upload your research paper with your recorded voice or you can utilize chargeable services of our professional RJs to record your paper in their voice on request.



The FARSHS member also entitled to get the benefits of free research podcasting of their research documents through video clips. We can also streamline your conference videos and display your slides/ online slides and online research video clips at reasonable charges, on request.



The FARSHS is eligible to earn from sales proceeds of his/her researches/reference/review Books or literature, while publishing with Global Journals. The FARSHS can decide whether he/she would like to publish his/her research in a closed manner. In this case, whenever readers purchase that individual research paper for reading, maximum 60% of its profit earned as royalty by Global Journals, will be credited to his/her bank account. The entire entitled amount will be credited to his/her bank account exceeding limit of minimum fixed balance. There is no minimum time limit for collection. The FARSS member can decide its price and we can help in making the right decision.

The FARSHS member is eligible to join as a paid peer reviewer at Global Journals Incorporation (USA) and can get remuneration of 15% of author fees, taken from the author of a respective paper. After reviewing 5 or more papers you can request to transfer the amount to your bank account.



MEMBER OF ASSOCIATION OF RESEARCH SOCIETY IN HUMAN SCIENCE (MARSHS)

The ' MARSHS ' title is accorded to a selected professional after the approval of the Editor-in-Chief / Editorial Board Members/Dean.



The "MARSHS" is a dignified ornament which is accorded to a person's name viz. Dr John E. Hall, Ph.D., MARSHS or William Walldroff, M.S., MARSHS.

MARSHS accrediting is an honor. It authenticates your research activities. Afterbecoming MARSHS, you can add 'MARSHS' title with your name as you use this recognition as additional suffix to your status. This will definitely enhance and add more value and repute to your name. You may use it on your professional Counseling Materials such as CV, Resume, Visiting Card and Name Plate etc.

The following benefitscan be availed by you only for next three years from the date of certification.



MARSHS designated members are entitled to avail a 25% discount while publishing their research papers (of a single author) in Global Journals Inc., if the same is accepted by our Editorial Board and Peer Reviewers. If you are a main author or co-author of a group of authors, you will get discount of 10%.

As MARSHS, you willbegiven a renowned, secure and free professional email address with 30 GB of space e.g. johnhall@globaljournals.org. This will include Webmail, Spam Assassin, Email Forwarders,Auto-Responders, Email Delivery Route tracing, etc.





We shall provide you intimation regarding launching of e-version of journal of your stream time to time.This may be utilized in your library for the enrichment of knowledge of your students as well as it can also be helpful for the concerned faculty members.

The MARSHS member can apply for approval, grading and certification of standards of their educational and Institutional Degrees to Open Association of Research, Society U.S.A.





Once you are designated as MARSHS, you may send us a scanned copy of all of your credentials. OARS will verify, grade and certify them. This will be based on your academic records, quality of research papers published by you, and some more criteria.

It is mandatory to read all terms and conditions carefully.

AUXILIARY MEMBERSHIPS

Institutional Fellow of Open Association of Research Society (USA) - OARS (USA)

Global Journals Incorporation (USA) is accredited by Open Association of Research Society, U.S.A (OARS) and in turn, affiliates research institutions as "Institutional Fellow of Open Association of Research Society" (IFOARS).



The "FARSC" is a dignified title which is accorded to a person's name viz. Dr. John E. Hall, Ph.D., FARSC or William Walldroff, M.S., FARSC.

The IFOARS institution is entitled to form a Board comprised of one Chairperson and three to five board members preferably from different streams. The Board will be recognized as "Institutional Board of Open Association of Research Society"-(IBOARS).

The Institute will be entitled to following benefits:

The IBOARS can initially review research papers of their institute and recommend them to publish with respective journal of Global Journals. It can also review the papers of other institutions after obtaining our consent. The second review will be done by peer reviewer of Global Journals Incorporation (USA) The Board is at liberty to appoint a peer reviewer with the approval of chairperson after consulting us.

The author fees of such paper may be waived off up to 40%.

The Global Journals Incorporation (USA) at its discretion can also refer double blind peer reviewed paper at their end to the board for the verification and to get recommendation for final stage of acceptance of publication.





The IBOARS can organize symposium/seminar/conference in their country on behalf of Global Journals Incorporation (USA)-OARS (USA). The terms and conditions can be discussed separately.

The Board can also play vital role by exploring and giving valuable suggestions regarding the Standards of "Open Association of Research Society, U.S.A (OARS)" so that proper amendment can take place for the benefit of entire research community. We shall provide details of particular standard only on receipt of request from the Board.



The board members can also join us as Individual Fellow with 40% discount on total fees applicable to Individual Fellow. They will be entitled to avail all the benefits as declared. Please visit Individual Fellow-sub menu of GlobalJournals.org to have more relevant details.

We shall provide you intimation regarding launching of e-version of journal of your stream time to time. This may be utilized in your library for the enrichment of knowledge of your students as well as it can also be helpful for the concerned faculty members.



After nomination of your institution as "Institutional Fellow" and constantly functioning successfully for one year, we can consider giving recognition to your institute to function as Regional/Zonal office on our behalf.
The board can also take up the additional allied activities for betterment after our consultation.

The following entitlements are applicable to individual Fellows:



Open Association of Research Society, U.S.A (OARS) By-laws states that an individual Fellow may use the designations as applicable, or the corresponding initials. The Credentials of individual Fellow and Associate designations signify that the individual has gained knowledge of the fundamental concepts. One is magnanimous and proficient in an expertise course covering the professional code of conduct, and follows recognized standards of practice.

Open Association of Research Society (US)/ Global Journals Incorporation (USA), as described in Corporate Statements, are educational, research publishing and professional membership organizations. Achieving our individual Fellow or Associate status is based mainly on meeting stated educational research requirements.



Disbursement of 40% Royalty earned through Global Journals : Researcher = 50%, Peer Reviewer = 37.50%, Institution = 12.50% E.g. Out of 40%, the 20% benefit should be passed on to researcher, 15 % benefit towards remuneration should be given to a reviewer and remaining 5% is to be retained by the institution.

We shall provide print version of 12 issues of any three journals [as per your requirement] out of our 38 journals worth $ 2376 USD.

Other:

The individual Fellow and Associate designations accredited by Open Association of Research Society (US) credentials signify guarantees following achievements:

- The professional accredited with Fellow honor, is entitled to various benefits viz. name, fame, honor, regular flow of income, secured bright future, social status etc.

- In addition to above, if one is single author, then entitled to 40% discount on publishing research paper and can get 10%discount if one is co-author or main author among group of authors.
- The Fellow can organize symposium/seminar/conference on behalf of Global Journals Incorporation (USA) and he/she can also attend the same organized by other institutes on behalf of Global Journals.
- The Fellow can become member of Editorial Board Member after completing 3yrs.
- The Fellow can earn 60% of sales proceeds from the sale of reference/review books/literature/publishing of research paper.
- Fellow can also join as paid peer reviewer and earn 15% remuneration of author charges and can also get an opportunity to join as member of the Editorial Board of Global Journals Incorporation (USA)
- • This individual has learned the basic methods of applying those concepts and techniques to common challenging situations. This individual has further demonstrated an in–depth understanding of the application of suitable techniques to a particular area of research practice.

Note :

"

- In future, if the board feels the necessity to change any board member, the same can be done with the consent of the chairperson along with anyone board member without our approval.
- In case, the chairperson needs to be replaced then consent of 2/3rd board members are required and they are also required to jointly pass the resolution copy of which should be sent to us. In such case, it will be compulsory to obtain our approval before replacement.
- In case of "Difference of Opinion [if any]" among the Board members, our decision will be final and binding to everyone.

"

Preferred Author Guidelines

We accept the manuscript submissions in any standard (generic) format.

We typeset manuscripts using advanced typesetting tools like Adobe In Design, CorelDraw, TeXnicCenter, and TeXStudio. We usually recommend authors submit their research using any standard format they are comfortable with, and let Global Journals do the rest.

Alternatively, you can download our basic template from https://globaljournals.org/Template.zip

Authors should submit their complete paper/article, including text illustrations, graphics, conclusions, artwork, and tables. Authors who are not able to submit manuscript using the form above can email the manuscript department at submit@globaljournals.org or get in touch with chiefeditor@globaljournals.org if they wish to send the abstract before submission.

Before and during Submission

Authors must ensure the information provided during the submission of a paper is authentic. Please go through the following checklist before submitting:

1. Authors must go through the complete author guideline and understand and *agree to Global Journals' ethics and code of conduct,* along with author responsibilities.
2. Authors must accept the privacy policy, terms, and conditions of Global Journals.
3. Ensure corresponding author's email address and postal address are accurate and reachable.
4. Manuscript to be submitted must include keywords, an abstract, a paper title, co-author(s') names and details (email address, name, phone number, and institution), figures and illustrations in vector format including appropriate captions, tables, including titles and footnotes, a conclusion, results, acknowledgments and references.
5. Authors should submit paper in a ZIP archive if any supplementary files are required along with the paper.
6. Proper permissions must be acquired for the use of any copyrighted material.
7. Manuscript submitted *must not have been submitted or published elsewhere* and all authors must be aware of the submission.

Declaration of Conflicts of Interest

It is required for authors to declare all financial, institutional, and personal relationships with other individuals and organizations that could influence (bias) their research.

Policy on Plagiarism

Plagiarism is not acceptable in Global Journals submissions at all.

Plagiarized content will not be considered for publication. We reserve the right to inform authors' institutions about plagiarism detected either before or after publication. If plagiarism is identified, we will follow COPE guidelines:

Authors are solely responsible for all the plagiarism that is found. The author must not fabricate, falsify or plagiarize existing research data. The following, if copied, will be considered plagiarism:

- Words (language)
- Ideas
- Findings
- Writings
- Diagrams
- Graphs
- Illustrations
- Lectures

- Printed material
- Graphic representations
- Computer programs
- Electronic material
- Any other original work

Authorship Policies

Global Journals follows the definition of authorship set up by the Open Association of Research Society, USA. According to its guidelines, authorship criteria must be based on:

1. Substantial contributions to the conception and acquisition of data, analysis, and interpretation of findings.
2. Drafting the paper and revising it critically regarding important academic content.
3. Final approval of the version of the paper to be published.

Changes in Authorship

The corresponding author should mention the name and complete details of all co-authors during submission and in manuscript. We support addition, rearrangement, manipulation, and deletions in authors list till the early view publication of the journal. We expect that corresponding author will notify all co-authors of submission. We follow COPE guidelines for changes in authorship.

Copyright

During submission of the manuscript, the author is confirming an exclusive license agreement with Global Journals which gives Global Journals the authority to reproduce, reuse, and republish authors' research. We also believe in flexible copyright terms where copyright may remain with authors/employers/institutions as well. Contact your editor after acceptance to choose your copyright policy. You may follow this form for copyright transfers.

Appealing Decisions

Unless specified in the notification, the Editorial Board's decision on publication of the paper is final and cannot be appealed before making the major change in the manuscript.

Acknowledgments

Contributors to the research other than authors credited should be mentioned in Acknowledgments. The source of funding for the research can be included. Suppliers of resources may be mentioned along with their addresses.

Declaration of funding sources

Global Journals is in partnership with various universities, laboratories, and other institutions worldwide in the research domain. Authors are requested to disclose their source of funding during every stage of their research, such as making analysis, performing laboratory operations, computing data, and using institutional resources, from writing an article to its submission. This will also help authors to get reimbursements by requesting an open access publication letter from Global Journals and submitting to the respective funding source.

Preparing your Manuscript

Authors can submit papers and articles in an acceptable file format: MS Word (doc, docx), LaTeX (.tex, .zip or .rar including all of your files), Adobe PDF (.pdf), rich text format (.rtf), simple text document (.txt), Open Document Text (.odt), and Apple Pages (.pages). Our professional layout editors will format the entire paper according to our official guidelines. This is one of the highlights of publishing with Global Journals—authors should not be concerned about the formatting of their paper. Global Journals accepts articles and manuscripts in every major language, be it Spanish, Chinese, Japanese, Portuguese, Russian, French, German, Dutch, Italian, Greek, or any other national language, but the title, subtitle, and abstract should be in English. This will facilitate indexing and the pre-peer review process.

The following is the official style and template developed for publication of a research paper. Authors are not required to follow this style during the submission of the paper. It is just for reference purposes.

Manuscript Style Instruction (Optional)

- Microsoft Word Document Setting Instructions.
- Font type of all text should be Swis721 Lt BT.
- Page size: 8.27" x 11'", left margin: 0.65, right margin: 0.65, bottom margin: 0.75.
- Paper title should be in one column of font size 24.
- Author name in font size of 11 in one column.
- Abstract: font size 9 with the word "Abstract" in bold italics.
- Main text: font size 10 with two justified columns.
- Two columns with equal column width of 3.38 and spacing of 0.2.
- First character must be three lines drop-capped.
- The paragraph before spacing of 1 pt and after of 0 pt.
- Line spacing of 1 pt.
- Large images must be in one column.
- The names of first main headings (Heading 1) must be in Roman font, capital letters, and font size of 10.
- The names of second main headings (Heading 2) must not include numbers and must be in italics with a font size of 10.

Structure and Format of Manuscript

The recommended size of an original research paper is under 15,000 words and review papers under 7,000 words. Research articles should be less than 10,000 words. Research papers are usually longer than review papers. Review papers are reports of significant research (typically less than 7,000 words, including tables, figures, and references)

A research paper must include:

a) A title which should be relevant to the theme of the paper.
b) A summary, known as an abstract (less than 150 words), containing the major results and conclusions.
c) Up to 10 keywords that precisely identify the paper's subject, purpose, and focus.
d) An introduction, giving fundamental background objectives.
e) Resources and techniques with sufficient complete experimental details (wherever possible by reference) to permit repetition, sources of information must be given, and numerical methods must be specified by reference.
f) Results which should be presented concisely by well-designed tables and figures.
g) Suitable statistical data should also be given.
h) All data must have been gathered with attention to numerical detail in the planning stage.

Design has been recognized to be essential to experiments for a considerable time, and the editor has decided that any paper that appears not to have adequate numerical treatments of the data will be returned unrefereed.

i) Discussion should cover implications and consequences and not just recapitulate the results; conclusions should also be summarized.
j) There should be brief acknowledgments.
k) There ought to be references in the conventional format. Global Journals recommends APA format.

Authors should carefully consider the preparation of papers to ensure that they communicate effectively. Papers are much more likely to be accepted if they are carefully designed and laid out, contain few or no errors, are summarizing, and follow instructions. They will also be published with much fewer delays than those that require much technical and editorial correction.

The Editorial Board reserves the right to make literary corrections and suggestions to improve brevity.



Format Structure

It is necessary that authors take care in submitting a manuscript that is written in simple language and adheres to published guidelines.

All manuscripts submitted to Global Journals should include:

Title

The title page must carry an informative title that reflects the content, a running title (less than 45 characters together with spaces), names of the authors and co-authors, and the place(s) where the work was carried out.

Author details

The full postal address of any related author(s) must be specified.

Abstract

The abstract is the foundation of the research paper. It should be clear and concise and must contain the objective of the paper and inferences drawn. It is advised to not include big mathematical equations or complicated jargon.

Many researchers searching for information online will use search engines such as Google, Yahoo or others. By optimizing your paper for search engines, you will amplify the chance of someone finding it. In turn, this will make it more likely to be viewed and cited in further works. Global Journals has compiled these guidelines to facilitate you to maximize the web-friendliness of the most public part of your paper.

Keywords

A major lynchpin of research work for the writing of research papers is the keyword search, which one will employ to find both library and internet resources. Up to eleven keywords or very brief phrases have to be given to help data retrieval, mining, and indexing.

One must be persistent and creative in using keywords. An effective keyword search requires a strategy: planning of a list of possible keywords and phrases to try.

Choice of the main keywords is the first tool of writing a research paper. Research paper writing is an art. Keyword search should be as strategic as possible.

One should start brainstorming lists of potential keywords before even beginning searching. Think about the most important concepts related to research work. Ask, “What words would a source have to include to be truly valuable in a research paper?” Then consider synonyms for the important words.

It may take the discovery of only one important paper to steer in the right keyword direction because, in most databases, the keywords under which a research paper is abstracted are listed with the paper.

Numerical Methods

Numerical methods used should be transparent and, where appropriate, supported by references.

Abbreviations

Authors must list all the abbreviations used in the paper at the end of the paper or in a separate table before using them.

Formulas and equations

Authors are advised to submit any mathematical equation using either MathJax, KaTeX, or LaTeX, or in a very high-quality image.

Tables, Figures, and Figure Legends

Tables: Tables should be cautiously designed, uncrowned, and include only essential data. Each must have an Arabic number, e.g., Table 4, a self-explanatory caption, and be on a separate sheet. Authors must submit tables in an editable format and not as images. References to these tables (if any) must be mentioned accurately.

Figures

Figures are supposed to be submitted as separate files. Always include a citation in the text for each figure using Arabic numbers, e.g., Fig. 4. Artwork must be submitted online in vector electronic form or by emailing it.

Preparation of Eletronic Figures for Publication

Although low-quality images are sufficient for review purposes, print publication requires high-quality images to prevent the final product being blurred or fuzzy. Submit (possibly by e-mail) EPS (line art) or TIFF (halftone/ photographs) files only. MS PowerPoint and Word Graphics are unsuitable for printed pictures. Avoid using pixel-oriented software. Scans (TIFF only) should have a resolution of at least 350 dpi (halftone) or 700 to 1100 dpi (line drawings). Please give the data for figures in black and white or submit a Color Work Agreement form. EPS files must be saved with fonts embedded (and with a TIFF preview, if possible).

For scanned images, the scanning resolution at final image size ought to be as follows to ensure good reproduction: line art: >650 dpi; halftones (including gel photographs): >350 dpi; figures containing both halftone and line images: >650 dpi.

Color charges: Authors are advised to pay the full cost for the reproduction of their color artwork. Hence, please note that if there is color artwork in your manuscript when it is accepted for publication, we would require you to complete and return a Color Work Agreement form before your paper can be published. Also, you can email your editor to remove the color fee after acceptance of the paper.

Tips for writing a good quality Social Science Research Paper

Techniques for writing a good quality homan social science research paper:

1. Choosing the topic: In most cases, the topic is selected by the interests of the author, but it can also be suggested by the guides. You can have several topics, and then judge which you are most comfortable with. This may be done by asking several questions of yourself, like "Will I be able to carry out a search in this area? Will I find all necessary resources to accomplish the search? Will I be able to find all information in this field area?" If the answer to this type of question is "yes," then you ought to choose that topic. In most cases, you may have to conduct surveys and visit several places. Also, you might have to do a lot of work to find all the rises and falls of the various data on that subject. Sometimes, detailed information plays a vital role, instead of short information. Evaluators are human: The first thing to remember is that evaluators are also human beings. They are not only meant for rejecting a paper. They are here to evaluate your paper. So present your best aspect.

2. Think like evaluators: If you are in confusion or getting demotivated because your paper may not be accepted by the evaluators, then think, and try to evaluate your paper like an evaluator. Try to understand what an evaluator wants in your research paper, and you will automatically have your answer. Make blueprints of paper: The outline is the plan or framework that will help you to arrange your thoughts. It will make your paper logical. But remember that all points of your outline must be related to the topic you have chosen.

3. Ask your guides: If you are having any difficulty with your research, then do not hesitate to share your difficulty with your guide (if you have one). They will surely help you out and resolve your doubts. If you can't clarify what exactly you require for your work, then ask your supervisor to help you with an alternative. He or she might also provide you with a list of essential readings.

4. Use of computer is recommended: As you are doing research in the field of homan social science then this point is quite obvious. Use right software: Always use good quality software packages. If you are not capable of judging good software, then you can lose the quality of your paper unknowingly. There are various programs available to help you which you can get through the internet.

5. Use the internet for help: An excellent start for your paper is using Google. It is a wondrous search engine, where you can have your doubts resolved. You may also read some answers for the frequent question of how to write your research paper or find a model research paper. You can download books from the internet. If you have all the required books, place importance on reading, selecting, and analyzing the specified information. Then sketch out your research paper. Use big pictures: You may use encyclopedias like Wikipedia to get pictures with the best resolution. At Global Journals, you should strictly follow here.



© Copyright by Global Journals | Guidelines Handbook

6. Bookmarks are useful: When you read any book or magazine, you generally use bookmarks, right? It is a good habit which helps to not lose your continuity. You should always use bookmarks while searching on the internet also, which will make your search easier.

7. Revise what you wrote: When you write anything, always read it, summarize it, and then finalize it.

8. Make every effort: Make every effort to mention what you are going to write in your paper. That means always have a good start. Try to mention everything in the introduction—what is the need for a particular research paper. Polish your work with good writing skills and always give an evaluator what he wants. Make backups: When you are going to do any important thing like making a research paper, you should always have backup copies of it either on your computer or on paper. This protects you from losing any portion of your important data.

9. Produce good diagrams of your own: Always try to include good charts or diagrams in your paper to improve quality. Using several unnecessary diagrams will degrade the quality of your paper by creating a hodgepodge. So always try to include diagrams which were made by you to improve the readability of your paper. Use of direct quotes: When you do research relevant to literature, history, or current affairs, then use of quotes becomes essential, but if the study is relevant to science, use of quotes is not preferable.

10. Use proper verb tense: Use proper verb tenses in your paper. Use past tense to present those events that have happened. Use present tense to indicate events that are going on. Use future tense to indicate events that will happen in the future. Use of wrong tenses will confuse the evaluator. Avoid sentences that are incomplete.

11. Pick a good study spot: Always try to pick a spot for your research which is quiet. Not every spot is good for studying.

12. Know what you know: Always try to know what you know by making objectives, otherwise you will be confused and unable to achieve your target.

13. Use good grammar: Always use good grammar and words that will have a positive impact on the evaluator; use of good vocabulary does not mean using tough words which the evaluator has to find in a dictionary. Do not fragment sentences. Eliminate one-word sentences. Do not ever use a big word when a smaller one would suffice.

Verbs have to be in agreement with their subjects. In a research paper, do not start sentences with conjunctions or finish them with prepositions. When writing formally, it is advisable to never split an infinitive because someone will (wrongly) complain. Avoid clichés like a disease. Always shun irritating alliteration. Use language which is simple and straightforward. Put together a neat summary.

14. Arrangement of information: Each section of the main body should start with an opening sentence, and there should be a changeover at the end of the section. Give only valid and powerful arguments for your topic. You may also maintain your arguments with records.

15. Never start at the last minute: Always allow enough time for research work. Leaving everything to the last minute will degrade your paper and spoil your work.

16. Multitasking in research is not good: Doing several things at the same time is a bad habit in the case of research activity. Research is an area where everything has a particular time slot. Divide your research work into parts, and do a particular part in a particular time slot.

17. Never copy others' work: Never copy others' work and give it your name because if the evaluator has seen it anywhere, you will be in trouble. Take proper rest and food: No matter how many hours you spend on your research activity, if you are not taking care of your health, then all your efforts will have been in vain. For quality research, take proper rest and food.

18. Go to seminars: Attend seminars if the topic is relevant to your research area. Utilize all your resources.
Refresh your mind after intervals: Try to give your mind a rest by listening to soft music or sleeping in intervals. This will also improve your memory. Acquire colleagues: Always try to acquire colleagues. No matter how sharp you are, if you acquire colleagues, they can give you ideas which will be helpful to your research.

19. Think technically: Always think technically. If anything happens, search for its reasons, benefits, and demerits. Think and then print: When you go to print your paper, check that tables are not split, headings are not detached from their descriptions, and page sequence is maintained.

20. Adding unnecessary information: Do not add unnecessary information like "I have used MS Excel to draw graphs." Irrelevant and inappropriate material is superfluous. Foreign terminology and phrases are not apropos. One should never take a broad view. Analogy is like feathers on a snake. Use words properly, regardless of how others use them. Remove quotations. Puns are for kids, not grunt readers. Never oversimplify: When adding material to your research paper, never go for oversimplification; this will definitely irritate the evaluator. Be specific. Never use rhythmic redundancies. Contractions shouldn't be used in a research paper. Comparisons are as terrible as clichés. Give up ampersands, abbreviations, and so on. Remove commas that are not necessary. Parenthetical words should be between brackets or commas. Understatement is always the best way to put forward earth-shaking thoughts. Give a detailed literary review.

21. Report concluded results: Use concluded results. From raw data, filter the results, and then conclude your studies based on measurements and observations taken. An appropriate number of decimal places should be used. Parenthetical remarks are prohibited here. Proofread carefully at the final stage. At the end, give an outline to your arguments. Spot perspectives of further study of the subject. Justify your conclusion at the bottom sufficiently, which will probably include examples.

22. Upon conclusion: Once you have concluded your research, the next most important step is to present your findings. Presentation is extremely important as it is the definite medium though which your research is going to be in print for the rest of the crowd. Care should be taken to categorize your thoughts well and present them in a logical and neat manner. A good quality research paper format is essential because it serves to highlight your research paper and bring to light all necessary aspects of your research.

.

Informal Guidelines of Research Paper Writing

Key points to remember:

- Submit all work in its final form.
- Write your paper in the form which is presented in the guidelines using the template.
- Please note the criteria peer reviewers will use for grading the final paper.

Final points:

One purpose of organizing a research paper is to let people interpret your efforts selectively. The journal requires the following sections, submitted in the order listed, with each section starting on a new page:

The introduction: This will be compiled from reference matter and reflect the design processes or outline of basis that directed you to make a study. As you carry out the process of study, the method and process section will be constructed like that. The results segment will show related statistics in nearly sequential order and direct reviewers to similar intellectual paths throughout the data that you gathered to carry out your study.

The discussion section:

This will provide understanding of the data and projections as to the implications of the results. The use of good quality references throughout the paper will give the effort trustworthiness by representing an alertness to prior workings.

Writing a research paper is not an easy job, no matter how trouble-free the actual research or concept. Practice, excellent preparation, and controlled record-keeping are the only means to make straightforward progression.

General style:

Specific editorial column necessities for compliance of a manuscript will always take over from directions in these general guidelines.

To make a paper clear: Adhere to recommended page limits.



© Copyright by Global Journals | Guidelines Handbook

Mistakes to avoid:

- Insertion of a title at the foot of a page with subsequent text on the next page.
- Separating a table, chart, or figure—confine each to a single page.
- Submitting a manuscript with pages out of sequence.
- In every section of your document, use standard writing style, including articles ("a" and "the").
- Keep paying attention to the topic of the paper.
- Use paragraphs to split each significant point (excluding the abstract).
- Align the primary line of each section.
- Present your points in sound order.
- Use present tense to report well-accepted matters.
- Use past tense to describe specific results.
- Do not use familiar wording; don't address the reviewer directly. Don't use slang or superlatives.
- Avoid use of extra pictures—include only those figures essential to presenting results.

Title page:

Choose a revealing title. It should be short and include the name(s) and address(es) of all authors. It should not have acronyms or abbreviations or exceed two printed lines.

Abstract: This summary should be two hundred words or less. It should clearly and briefly explain the key findings reported in the manuscript and must have precise statistics. It should not have acronyms or abbreviations. It should be logical in itself. Do not cite references at this point.

An abstract is a brief, distinct paragraph summary of finished work or work in development. In a minute or less, a reviewer can be taught the foundation behind the study, common approaches to the problem, relevant results, and significant conclusions or new questions.

Write your summary when your paper is completed because how can you write the summary of anything which is not yet written? Wealth of terminology is very essential in abstract. Use comprehensive sentences, and do not sacrifice readability for brevity; you can maintain it succinctly by phrasing sentences so that they provide more than a lone rationale. The author can at this moment go straight to shortening the outcome. Sum up the study with the subsequent elements in any summary. Try to limit the initial two items to no more than one line each.

Reason for writing the article—theory, overall issue, purpose.

- Fundamental goal.
- To-the-point depiction of the research.
- Consequences, including definite statistics—if the consequences are quantitative in nature, account for this; results of any numerical analysis should be reported. Significant conclusions or questions that emerge from the research.

Approach:

- Single section and succinct.
- An outline of the job done is always written in past tense.
- Concentrate on shortening results—limit background information to a verdict or two.
- Exact spelling, clarity of sentences and phrases, and appropriate reporting of quantities (proper units, important statistics) are just as significant in an abstract as they are anywhere else.

Introduction:

The introduction should "introduce" the manuscript. The reviewer should be presented with sufficient background information to be capable of comprehending and calculating the purpose of your study without having to refer to other works. The basis for the study should be offered. Give the most important references, but avoid making a comprehensive appraisal of the topic. Describe the problem visibly. If the problem is not acknowledged in a logical, reasonable way, the reviewer will give no attention to your results. Speak in common terms about techniques used to explain the problem, if needed, but do not present any particulars about the protocols here.

The following approach can create a valuable beginning:

- Explain the value (significance) of the study.
- Defend the model—why did you employ this particular system or method? What is its compensation? Remark upon its appropriateness from an abstract point of view as well as pointing out sensible reasons for using it.
- Present a justification. State your particular theory(-ies) or aim(s), and describe the logic that led you to choose them.
- Briefly explain the study's tentative purpose and how it meets the declared objectives.

Approach:

Use past tense except for when referring to recognized facts. After all, the manuscript will be submitted after the entire job is done. Sort out your thoughts; manufacture one key point for every section. If you make the four points listed above, you will need at least four paragraphs. Present surrounding information only when it is necessary to support a situation. The reviewer does not desire to read everything you know about a topic. Shape the theory specifically—do not take a broad view.

As always, give awareness to spelling, simplicity, and correctness of sentences and phrases.

Procedures (methods and materials):

This part is supposed to be the easiest to carve if you have good skills. A soundly written procedures segment allows a capable scientist to replicate your results. Present precise information about your supplies. The suppliers and clarity of reagents can be helpful bits of information. Present methods in sequential order, but linked methodologies can be grouped as a segment. Be concise when relating the protocols. Attempt to give the least amount of information that would permit another capable scientist to replicate your outcome, but be cautious that vital information is integrated. The use of subheadings is suggested and ought to be synchronized with the results section.

When a technique is used that has been well-described in another section, mention the specific item describing the way, but draw the basic principle while stating the situation. The purpose is to show all particular resources and broad procedures so that another person may use some or all of the methods in one more study or referee the scientific value of your work. It is not to be a step-by-step report of the whole thing you did, nor is a methods section a set of orders.

Materials:

Materials may be reported in part of a section or else they may be recognized along with your measures.

Methods:

- Report the method and not the particulars of each process that engaged the same methodology.
- Describe the method entirely.
- To be succinct, present methods under headings dedicated to specific dealings or groups of measures.
- Simplify—detail how procedures were completed, not how they were performed on a particular day.
- If well-known procedures were used, account for the procedure by name, possibly with a reference, and that's all.

Approach:

It is embarrassing to use vigorous voice when documenting methods without using first person, which would focus the reviewer's interest on the researcher rather than the job. As a result, when writing up the methods, most authors use third person passive voice.

Use standard style in this and every other part of the paper—avoid familiar lists, and use full sentences.

What to keep away from:

- Resources and methods are not a set of information.
- Skip all descriptive information and surroundings—save it for the argument.
- Leave out information that is immaterial to a third party.



© Copyright by Global Journals | Guidelines Handbook

Results:

The principle of a results segment is to present and demonstrate your conclusion. Create this part as entirely objective details of the outcome, and save all understanding for the discussion.

The page length of this segment is set by the sum and types of data to be reported. Use statistics and tables, if suitable, to present consequences most efficiently.

You must clearly differentiate material which would usually be incorporated in a study editorial from any unprocessed data or additional appendix matter that would not be available. In fact, such matters should not be submitted at all except if requested by the instructor.

Content:

- Sum up your conclusions in text and demonstrate them, if suitable, with figures and tables.
- In the manuscript, explain each of your consequences, and point the reader to remarks that are most appropriate.
- Present a background, such as by describing the question that was addressed by creation of an exacting study.
- Explain results of control experiments and give remarks that are not accessible in a prescribed figure or table, if appropriate.
- Examine your data, then prepare the analyzed (transformed) data in the form of a figure (graph), table, or manuscript.

What to stay away from:

- Do not discuss or infer your outcome, report surrounding information, or try to explain anything.
- Do not include raw data or intermediate calculations in a research manuscript.
- Do not present similar data more than once.
- A manuscript should complement any figures or tables, not duplicate information.
- Never confuse figures with tables—there is a difference.

Approach:

As always, use past tense when you submit your results, and put the whole thing in a reasonable order.

Put figures and tables, appropriately numbered, in order at the end of the report.

If you desire, you may place your figures and tables properly within the text of your results section.

Figures and tables:

If you put figures and tables at the end of some details, make certain that they are visibly distinguished from any attached appendix materials, such as raw facts. Whatever the position, each table must be titled, numbered one after the other, and include a heading. All figures and tables must be divided from the text.

Discussion:

The discussion is expected to be the trickiest segment to write. A lot of papers submitted to the journal are discarded based on problems with the discussion. There is no rule for how long an argument should be.

Position your understanding of the outcome visibly to lead the reviewer through your conclusions, and then finish the paper with a summing up of the implications of the study. The purpose here is to offer an understanding of your results and support all of your conclusions, using facts from your research and generally accepted information, if suitable. The implication of results should be fully described.

Infer your data in the conversation in suitable depth. This means that when you clarify an observable fact, you must explain mechanisms that may account for the observation. If your results vary from your prospect, make clear why that may have happened. If your results agree, then explain the theory that the proof supported. It is never suitable to just state that the data approved the prospect, and let it drop at that. Make a decision as to whether each premise is supported or discarded or if you cannot make a conclusion with assurance. Do not just dismiss a study or part of a study as "uncertain."

Research papers are not acknowledged if the work is imperfect. Draw what conclusions you can based upon the results that you have, and take care of the study as a finished work.

- You may propose future guidelines, such as how an experiment might be personalized to accomplish a new idea.
- Give details of all of your remarks as much as possible, focusing on mechanisms.
- Make a decision as to whether the tentative design sufficiently addressed the theory and whether or not it was correctly restricted. Try to present substitute explanations if they are sensible alternatives.
- One piece of research will not counter an overall question, so maintain the large picture in mind. Where do you go next? The best studies unlock new avenues of study. What questions remain?
- Recommendations for detailed papers will offer supplementary suggestions.

Approach:

When you refer to information, differentiate data generated by your own studies from other available information. Present work done by specific persons (including you) in past tense.

Describe generally acknowledged facts and main beliefs in present tense.

The Administration Rules

Administration Rules to Be Strictly Followed before Submitting Your Research Paper to Global Journals Inc.

Please read the following rules and regulations carefully before submitting your research paper to Global Journals Inc. to avoid rejection.

Segment draft and final research paper: You have to strictly follow the template of a research paper, failing which your paper may get rejected. You are expected to write each part of the paper wholly on your own. The peer reviewers need to identify your own perspective of the concepts in your own terms. Please do not extract straight from any other source, and do not rephrase someone else's analysis. Do not allow anyone else to proofread your manuscript.

Written material: You may discuss this with your guides and key sources. Do not copy anyone else's paper, even if this is only imitation, otherwise it will be rejected on the grounds of plagiarism, which is illegal. Various methods to avoid plagiarism are strictly applied by us to every paper, and, if found guilty, you may be blacklisted, which could affect your career adversely. To guard yourself and others from possible illegal use, please do not permit anyone to use or even read your paper and file.

Criterion for Grading a Research Paper (Compilation) by Global Journals

Please note that following table is only a Grading of "Paper Compilation" and not on "Performed/Stated Research" whose grading solely depends on Individual Assigned Peer Reviewer and Editorial Board Member. These can be available only on request and after decision of Paper. This report will be the property of Global Journals

Topics	Grades		
	A-B	**C-D**	**E-F**
Abstract	Clear and concise with appropriate content, Correct format. 200 words or below	Unclear summary and no specific data, Incorrect form Above 200 words	No specific data with ambiguous information Above 250 words
Introduction	Containing all background details with clear goal and appropriate details, flow specification, no grammar and spelling mistake, well organized sentence and paragraph, reference cited	Unclear and confusing data, appropriate format, grammar and spelling errors with unorganized matter	Out of place depth and content, hazy format
Methods and Procedures	Clear and to the point with well arranged paragraph, precision and accuracy of facts and figures, well organized subheads	Difficult to comprehend with embarrassed text, too much explanation but completed	Incorrect and unorganized structure with hazy meaning
Result	Well organized, Clear and specific, Correct units with precision, correct data, well structuring of paragraph, no grammar and spelling mistake	Complete and embarrassed text, difficult to comprehend	Irregular format with wrong facts and figures
Discussion	Well organized, meaningful specification, sound conclusion, logical and concise explanation, highly structured paragraph reference cited	Wordy, unclear conclusion, spurious	Conclusion is not cited, unorganized, difficult to comprehend
References	Complete and correct format, well organized	Beside the point, Incomplete	Wrong format and structuring

Index

A

Adjatekpor · 18
Ayamapor · 15, 16

C

Colloquium · 18

H

Hispanics · 9

K

Konstantinakos · 1, 2, 3

L

Ligbolekukame · 16

O

Olurunfemi · 16
Oxulosu · 14

P

Prolong · 1

S

Stigma · 4, 5, 7
Schermbeck · 20
Szczypka · 20



save our planet



Global Journal of Human Social Science

Visit us on the Web at www.GlobalJournals.org | www.SocialScienceResearch.org
or email us at helpdesk@globaljournals.org



ISSN 975587

© Global Journals