Volume 22 Issue 26
Originally issued as E4



Global Journal of HUMAN-SOCIAL SCIENCE: E
Economics
Volume 22 Issue 4 Version 1.0 Year 2022
Type: Double Blind Peer Reviewed International Research Journal
Publisher: Global Journals
Online ISSN: 2249-460x & Print ISSN: 0975-587X

Systematic Review of the Literature on Family Farming and the Social and Solidarity Economy in Brazil and Latin America

By Pedro Henrique Mariosa & Henrique Dos Santos Pereira

Federal University of Amazonas

Abstract- Concerned with the increase in hunger worldwide, as well as unemployment and the lack of equity in the distribution of income, the United Nations began to address genuinely Latin American scientific categories in its agendas, assemblies and task forces. The two main categories are Family Farming, with the recent establishment of the Family Farming decade (2019-2028) and the Social and Solidarity Economy as a tool for transposing the Sustainable Development Goals (SDGs) in the Territories. Together, these categories can be responsible for achieving the SDGs in 78% of the world's territory. There is a need, however, to clarify whether the science produced in Latin America also presents trends of intersection, in the search for the theoretical construction of a new paradigm of production and consumption. In this sense, the objective of this study was to identify trends in scientific production on the categories Family Farming and Social and Solidarity Economy. An adaptation of the PRISMA method was developed as a systematic literature review to identify these trends in the scientific field in Latin America.

Keywords: PRISMA method; sustainable development goals; social economy; productive inclusion.

GJHSS-E Classification: DDC Code: 306 LCC Code: HM281, LCC Code: KF27



Strictly as per the compliance and regulations of:



© 2022. Pedro Henrique Mariosa & Henrique Dos Santos Pereira. This research/review article is distributed under the terms of the Attribution-NonCommercial-NoDerivatives 4.0 International (CC BY-NC-ND 4.0). You must give appropriate credit to authors and reference this article if parts of the article are reproduced in any manner. Applicable licensing terms are at https://creativecommons.org/licenses/by-nc-nd/4.0/.

Systematic Review of the Literature on Family Farming and the Social and Solidarity Economy in Brazil and Latin America

Pedro Henrique Mariosa [α] & Henrique Dos Santos Pereira [σ]

Abstract- Concerned with the increase in hunger worldwide, as well as unemployment and the lack of equity in the distribution of income, the United Nations began to address genuinely Latin American scientific categories in its agendas, assemblies and task forces. The two main categories are Family Farming, with the recent establishment of the Family Farming decade (2019-2028) and the Social and Solidarity Economy as a tool for transposing the Sustainable Development Goals (SDGs) in the Territories. Together, these categories can be responsible for achieving the SDGs in 78% of the world's territory. There is a need, however, to clarify whether the science produced in Latin America also presents trends of intersection, in the search for the theoretical construction of a new paradigm of production and consumption. In this sense, the objective of this study was to identify trends in scientific production on the categories Family Farming and Social and Solidarity Economy. An adaptation of the PRISMA method was developed as a systematic literature review to identify these trends in the scientific field in Latin America. After executing the PRISMA method, we arrived at 244 articles from Family Farming and 56 articles from the Social and Solidarity Economy between 2016 and 2020, categorized into Areas of Study and Knowledge, Macrocategories and Microcategories. There are consolidated trends in the intersection between Family Farming and the Social and Solidarity Economy in productions on Productive Inclusion, Sustainable Development and Sustainability Indicators, and with evident growth in the areas of productions on Food Security, mainly in the Organic Foods and Agroecology microcategories and productions on Public Policies in microcategories such as the National School Feeding Program, Social Transformations and Social Technologies. We conclude that the relationship between Social and Solidarity Economy and Family Farming is reciprocal in terms of granting cohesion to the scientific production network, extrapolating the borders of Brazil and integrating not only Latin America, but also Iberoamerica as a path to the expansion of both. the categories.

Keywords: PRISMA method; sustainable development goals; social economy; productive inclusion.

I. Introducion

At the end of 2020, while 400 million people in the world were newly unemployed, in Brazil, 20 million people were facing hunger and 116 million were experiencing some level of food insecurity, a trend that went against the goals of the UN Global Agenda 2030. This scenario is even more serious given the increase in inequality, since, in 2020, the 32 richest companies in the world would have profited 577 billion reais more than in previous years (OXFAM, 2020, 2021).

Nonetheless, it is necessary to consider that, at present, the reduction of jobs in Latin America is not only due to the crisis generated by the pandemic, since in the pre-pandemic period the level of unemployment also showed signs of falling. In relation to rural employment, it was already showing aspects of stagnation. In 2016, Latin America was experiencing approximately zero economic growth rates. The reduction in agricultural jobs is also due to the drop in exports from Latin America and the Caribbean, with a decrease of approximately ¼ of total exports in 2020 (Quicaña, 2020).

The sharp drop in external demand and commodity prices in the region forced many countries to propose fiscal adjustment agendas. Social manifestations emerged in a systematic way, triggered by the gap between the population's expectation of spending on social spending and the ability to provide economic growth in these countries (BM, 2020a). Although agriculture plays an important role in the viability of maintaining the trend of social spending, in addition to the pressure of demand and price variation, this sector suffers from other limiting factors for the supply of affordable and nutritious food to a constantly growing population. Among these factors are climate change, water scarcity, soil depletion and loss of biodiversity, which places agriculture at a crossroads, not only in Latin America, but throughout the world (FAO-IFAD, 2019).

As part of facing these crises, the strengthening of Family Farming (FF) and the Social and Solidarity Economy, objects of this review, emerges as a solution to the structural problems linked to food insecurity, inequality, and unemployment. It is considered that Family Farming is essential for the fulfilment of several goals of the Sustainable Development Goals (SDGs) (UN, 2018). On the other hand, another socio-political category also presents itself as a tool for transposing the Sustainable Development Goals in the territories, the Social and Solidarity Economy (Utting, 2018; Compère & Schoenmaeckers, 2021).

Author α: Dr. in Environmental Science and Sustainability of the Amazon. Professor in Federal University of Amazonas.
e-mail: pedromariosa@ufam.edu.br
Author σ: Ph.D. in Ecology and Full Professor in Federal University of Amazonas. e-mail: hpereira@ufam.edu.br

© 2022 Global Journals

Brazil has a prominent position as a country capable of producing practical, positive, and negative effects at a global level and fostering conceptual bases for a paradigmatic change or maintenance of agriculture. Of these actions, we highlight the promotion of rural credit, the guarantee of minimum prices, agricultural research, technical assistance and rural extension and subsidies for the acquisition of inputs and the expansion of the agricultural frontier (Grisa & Schneider, 2015).

As the collective organizations of the Social and Solidarity Economy (SSE) are a representative part of the FF in Brazil, it is possible to envision the synergy and the need for the contribution of resources to the intersection of these two fields, since the mobilizations and social demands of the grassroots organizations of FF and SSE, in many points, have similar and coincident trajectories of struggle.

a) The Family Farming in Brazil

At the end of the 20th century, actions were instituted at the national level for Rural Development (DR), with the aim of leveraging the representativeness of agriculture in the national Gross Domestic Product (GDP). These efforts to leverage agriculture and the unification of development policies made the share of agriculture in Brazilian GDP jump from 6.87% in the early 1990s to a significant 8.54% four years later (BM, 2020b).

The Agricultural GDP, on the one hand, is linked to the agriculture sectors linked to super-specialization, such as the grain and other commodities export sector, which despite contributing to the maintenance of agriculture's share in the country's GDP, presents a mismatch between social and economic responsibilities. policy in relation to the private interests of accumulation downstream and upstream of agricultural activity (Malagodi, 2017). On the other hand, there is the family farming sector, which is always positioned on the margins of the actions of the Brazilian State (Grisa & Schneider, 2015), even though it is the sector responsible for the internal supply and occupation of the rural workforce.

In 2006, The Law #11,326 of 2006, defined the guidelines for the design of the National Family Farming Policy. With the objective of unifying actions to promote the State, then, the generalizing concept of Family Farming (FA) brought together those different denominations of the social agents of agriculture and the countryside, considered until then: peasants, mini landowners, small producers, poor agricultural producers. (Manzanal & Schneider, 2011). Currently, because of this public policy, FF in Brazil is responsible for 22.88% (~20 billion dollars) of production and for the representation of approximately 67% (10.1 million people) of the personnel employed in national agriculture (IBGE, 2019).

Among the actions of the FF development policy, the National Program of Improvement of Familiar Farming (PRONAF) is pointed out as an exemplary case, which presents a systematic increase in the volume of contracts and resources available to FF workers (Manzanal & Schneider, 2011). PRONAF did not emerge as an isolated government policy, but because of intense and diffuse social mobilizations that culminated in the creation of legal frameworks such as the Land Statute, institutions such as the National Institute for Colonization and Agrarian Reform (INCRA) and series of programs such as the Rural Producer Support Program (PAPP), the latter responsible for expanding community associations of FF (Sabourin, 2009; 2017).

Nevertheless, the FF has a multi-located and pluriactive territorial socioeconomic microdynamics as significant characteristics, that is, in addition to intrinsically agricultural activities, such as production and gathering, whether animal and plant, it also develops rural non-farm activities, such as processing, trade and services, in a territory that exceeds the physical limits of the family production unit (Fuller, 1990; Mardens, 1995; Sacco-Dos-Anjos, 2003; Baumel & Basso, 2004; Haggblade, Hazzel & Reardon, 2007; Mattei, 2008; Schneider, 2003, 2009; Gaspari, Khatounian & Marques, 2018; Cazella, et al. 2020).

At the global level, in the last decade, FF has become the focus of sustainable development actions worldwide. The United Nations designates 2014 as the International Year of Family Farming (IYFF). Three years later, it was established that FF becomes a guiding centre for agricultural, environmental and social policy guidelines on international agendas, precepts discussed in the 2019-2028 agenda called the United Nations Decade of Family Farming and institutionalized in the Ten-Year Plan of the United Nations. Family Farming 2019-2028 (FAO-IFAD, 2019). This plan defines PA as a fundamental instrument for the implementation of the Sustainable Development Goals (SDGs) in the territories, since 78% of the 169 goals depend on actions exclusively or mainly carried out in rural areas (BERDEGUE, 2019).

b) Social and Solidarity Economy

Regarding the commitments of the Global Agenda 2030, the United Nations Research Institute for Social Development, in 2018, through an inter-institutional task force, pointed to the SSE aspect as an effective instrument for achieving the SDGs in the territories. The SSE is a branch that demonstrates operating in an unequal field of disputes of economic and financial liberalization, privatization, and austerity measures, which start to favor specific business and economic sectors instead of prioritizing socio-environmental inclusion and the reduction of inequalities (Utting, 2018). Today, the ESS has an increasing

© 2022 Global Journals

number of professionals, academics, activists, and policymakers, committed to the consolidation of experiences for the systematization of tools that provide the empirical application of a new economic logic (Compère & Schoenmaeckers, 2021).

The SSE is derived from fields of a plural economy and has the objective of proposing new perspectives towards the inversion of the subalternity of work in relation to capital. In Europe, one of the economic fields that form the SSE, with extensive consolidated academic production, is Social Economy (Defourny & Monzón, 1992; Monzón, 2003; Laville, 2004; Mendiguren, Etxezarreta & Guridi, 2009; Draperi, 2013; Mendiguren & Etxezaretta, 2015; Sá, 2016, 2017) which can be defined as an economic sector of production or circulation of goods and services that does not have profitability as its main objective (VIDAL E GARCÍA, 2006).

In Latin America, the Solidarity Economy (Ecosol) (Laville, 1994; Singer, 1999, 2002; Kraychete, 2000; Gaiger, 2002, 2013, 2014, 2019; Gaiger & Kuyven, 2020; França-Filho, 2002; França-Filho, 2006) has a temporal trajectory concomitant with the reforms in policies to promote family farming in Brazil. Unlike the Social Economy as an economic sector, Ecosol consists of a set of guiding principles for the economic organization and social inclusion of certain groups, with the aim of breaking the isolation of small and micro-enterprises. (SINGER, 1999).

Since the last quarter of the 20th century, Ecosol has permeated important discussions for the establishment of alternatives that represent new production and consumption paradigms. The reference text of the III CONAES (2014, p.5) brings as one of Ecosol's key points, the social valorisation of work as a producer of direct implications for the development of men and women's capacities and the overcoming of the subalternity of work in relation to the capital.

Ecosol's field includes cooperatives and other forms of social enterprises, self-help groups, community organizations, formal and informal economy workers' associations, Non-Governmental Organizations (NGOs) and other civil society organizations that ensure the provision of services, finance initiatives solidarity, among others (Morais, 2013; 2014).

In Brazil, the national representation of cooperatives is divided between the Organization of Cooperatives of Brazil (OCB) and the National Union of Solidarity Cooperative Organizations (UNICOPAS), the latter which now brings together the main sectoral confederations of cooperatives and Ecosol associations. The OCB has under its national unified representation, in 2018, approximately 7 thousand cooperatives, of which 1.6 thousand are linked to the agricultural sector (OCB, 2019), mostly from the south and southeast of the country, with emphasis on the national production of cooperatives in grain monoculture, such as peanuts, soybeans and corn. At UNICOPAS, in turn, more than 2,500 organizations among cooperatives and associations are linked to the 4 cooperative centres, incorporating rural social agents such as farmers and family farmers, settlers and settlers of agrarian reform, indigenous peoples, riverine peoples, quilombolas (maroons) and gatherers, with greater representation in the north of the country.

c) The FF & SSE intersection assumptions

With trajectories and history of achievements of the base and now, with the advent of the SDGs, the internationalization of both concepts presents some intersections. The intersections between FF and SSE are materialized in the following evidence: a) we are in the decade of FF, b) public policies and development strategies in FF can impact 78% for the fulfilment of the SDGs in the territories, c) The SSE a tool for transposing the SDGs and d) the SSE projects are a representative part of the total FF enterprises in the country.

There is a need, however, to clarify whether the science (as a systematic set of knowledge) that underpins these categories also presents trends of intersection, in the search for the theoretical construction of a new paradigm of production and consumption, following the trends of the international political agenda. Although this trend is observable in the intellectual and political fields, it would still be necessary to show whether such intersections are taking place in the economic field in different territories, beyond the multilateral discourses and agendas.

Thus, based on these premises, the guiding question of the study was defined as: "What are the theoretical-methodological intersections and the trend of scientific production on the categories Social and Solidarity Economy and Family Farming?" Therefore, the objective of the study was to identify trends in scientific production on the categories Family Farming and Social and Solidarity Economy.

II. Methods

In a comprehensive way, the historical approach (Bachelard, 1996) was adopted as an epistemological line, in the sense that it was only possible to understand the trend of the discussions and the transformations of the SSE and the AF through a process of reflection that considered the logical, ideological, and historical. In line with the historical approach, the construction of the analysis tool presupposes that all the specific methods of collection, processing and analysis that will be adopted begin with the problems presented and specific hypotheses to solve them.

This FF and SSE representativeness analysis tool followed an adaptation of the PRISMA Method (Preferred Reporting Items for Systematic reviews and Meta-Analyse). The PRISMA guidelines guide the

© 2022 Global Journals

objective of improving the quality of reporting data from Systematic Review and Meta-analysis (BRASIL, 2012) and their adaptation consisted of the following methodological approach (Fig.1):

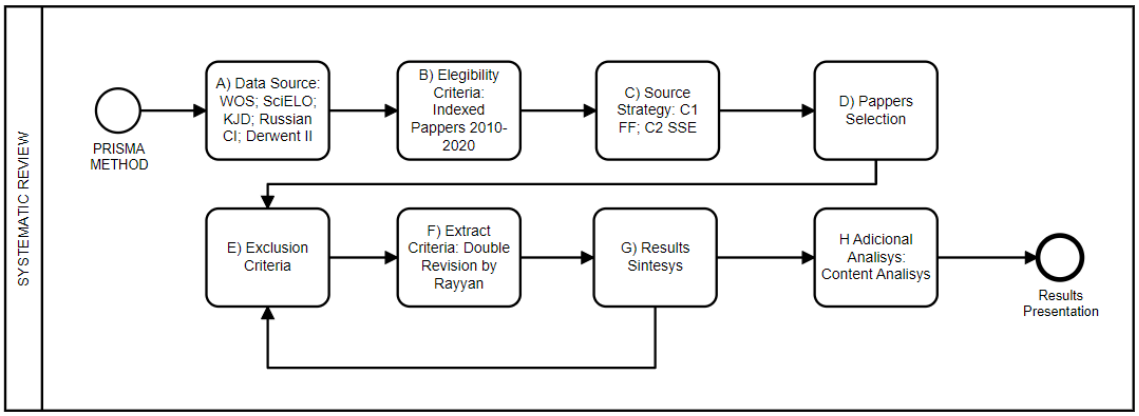

Fig. 1: PRISMA Method Adaptation for Systematic Review of the Literature

The results are presented in two parts. The first deals with the synthesis of the application of the Prisma method on the Systematic Review of the literature on Family Farming, with notes on the trends and intersections of the two areas. The second, following the same logic, but on Social and Solidarity Economy. Finally, at the intersection of both categories, we present a synthesis of the main points of convergence.

III. Results

a) The Family Farming; a systematic review of the literature

The influence of social and trade union movements, from the end of the 20th century to the beginning of the 21st century, transported the demands on Agrarian Reform from a restricted scope of land distribution to a consolidated political agenda uniting agrarian reform policies with those of rural development (Marques, 2007). In this passage from the 20th century to the 21st century, the legitimacy of FF in Brazil was configured in three main points, the first in the political field, the second in the social field and the last in the academy.

b) The main debates in the political and social fields of FF in Brazil

In the political field, the debate intensifies through the social struggles that invade the political field and guarantee the legitimacy by the State of FF as a synthesis-category of protection of the plurality of social categories in the countryside, against the until then category "small producer", which encompassed self-styled agro-industrial positions within this category (Schneider, 2003). In the social field, PRONAF is legitimized as a response to pressure from rural union movements, which now have defence mechanisms for the establishment of public policies differentiated by the category (Schneider, 2003).

At the intersection of the political and social fields, in the last two decades in Brazil, despite the increase in agricultural production accompanied by the increase in family income at all income levels, the income inequality of the rural population is still present and growing (Neves et al., 2020). As of 2015, the dismantling of family farming policies and other policies follows the global tone of weakening democratic institutions (Milhorance et al., 2020).

In Brazil, after the consolidation of the guidelines of the National Policy on Family Farming (Law #11,326/2006), PRONAF obtained significant results in promoting FF. However, the income inequality of the rural population is increasing and this trend, even if at a slower rate, also occurs among PRONAF beneficiaries (Neves et al. 2020).

c) The construction of the academic field of FF in Brazil and Latin America

In the academic sphere, in the last three decades debates on topics such as the labor market, occupational and migratory dynamics, environmental issues and sustainability of local agri-food systems and the rural population have intensified (Schneider, 2003; Souza, Fornazier & Delgrossi, 2020). The practical result of the intensification of the discussion of these themes in the academy is reflected in the role of universities as the main agencies for scientific development and dissemination of social technologies to support farmers and communities (Carvalho & Lago, 2019).

In Latin America, this trend in academic production has intensified in the last 5 years (2016-2020) reflected in the increase in the production of 463 open access articles on the theme of FF, compared to the previous 5 years (2011-2015) which corresponds to a total of 204 articles. Brazil is the protagonist, with 380 of the 463 articles produced. Of the 66 analysis categories related to the articles, 14 of these categories concentrate more than 65% of the articles (303 articles), which shows recent interdisciplinarity while the multiple approaches of FF in the academy.

© 2022 Global Journals

In all, the 463 articles received 1280 citations in these 5 years, excluding self-citations. Among these articles, 1214 citations correspond to the 463 articles themselves, also excluding self-citations. This means that there is cohesion among scientists who publish on FF in Latin America.

In a detailed reading of the 463 filtered articles, 219 were excluded, and 191 of these (~87%) because they dealt either only with farming or only with the family environment and not in an associated way, in themes such as agribusiness, soil study, pathologies of plants and animals, families of viruses and bacteria, among others. Of the remaining 28 discarded, 12, despite having both terms worked in an associated way, did not have family farming as the theme or study area of the article, 9 had the study area outside Latin America, 1 was in private access and 1 was not an indexed article. was an article indexed in a journal. At the end of applying the exclusion criteria, a total of 244 indexed articles were obtained, with Family Farming as an object of study, in Latin American countries, from 2016-2020 and with open access.

d) Content Analysis and Categorization of Family Farming valid articles

The analysis by Study Area corresponds to the place where the study was carried out, thus incorporating studies from around the world on Family Farming in Latin America. In other words, the nationality of the scientific journal or the authors was not considered, but the theoretical or empirical field of the study.

The second category level is by Knowledge Area. At this level, 8 areas of knowledge were identified that refer to articles considered post-content analysis. As for national and continental studies, we are referring to the specific cases of Brazil and Latin America, respectively. As most articles refer to studies in Brazil, this one was divided into the 5 regions of the country.

At the third level, called Macrocategory, 12 variations were identified among the 244 valid articles, considering Macrocategory the most comprehensive theme of the article. Among the main categories are the Social and Solidarity Economy, Social Technology, Climate Change, Occupational Health, Animal and Vegetable Production, Market, Economic Viability, among others.

At the fourth level, called Microcategory, in which we consider the specific theme of each article, 44 variations were identified among the 244 valid articles. In this, specificities were observed such as Production Chains (milk, fruit, poultry, among others), Institutional State Programs (PRONAF, PNAE, PAA and PNPB), Agricultural Mechanization, Monoculture, Intoxication, Adaptability, Theoretical Studies (such as literature reviews), among others.

At the fifth and final level, we evaluated the number of total citations and per year, to then arrive at the synthesis of articles and trend categories among the valid indexed articles for the five-year period 2016-2020. This last level was worked transversally in the other levels, that is, when we present that some production is highlighted in a category, we consider this highlight as being the articles with the most citations among the category to which it was assigned.

e) The relationship between FF Study Area and Knowledge Area in volume of articles and main references

i. *Latin America*

In continental studies of Latin America, the production in public policies stands out, with the article on agrarian economic policy of leftist governments in Latin America and the lack of an agenda for social transformation as the protagonist (Vergara-Camus and Kay, 2017).

Ecuador stands out for having 4 articles in 4 different Knowledge Areas, with a leading role in the Socioeconomics article on a study of alternative food systems and the heterogeneity of factors that motivate or not the purchase decision of agroecological and non-agroecological consumers (April-Lalonde et al., 2020).

Another highlight is the study in Costa Rica, in the Food Security Knowledge Area, on the cultural domain of food plants of the Ngäbe indigenous peoples and their perception of the intense decrease in the local production of these plants in the face of new paradigms of conservation and development (D'ambrosio E Puri, 2016).

ii. *Brazil*

The number of articles found was 57 articles from national studies and another 172 from specific regions of the country.

National surveys show a diversity of Knowledge Areas, covering all of them, with prevalence of the Public Policies theme, with 26 of the 57 articles. Of the 6 most cited articles with a National Study Area, 4 are on Public Policies, and of these 3 are on the National School Feeding Program (PNAE). The most relevant of them (Hawkes, et al., 2016) presents 5 lessons about the PNAE on the program's contribution to the interrelationship of family farming with other sectors, such as public health and nutrition.

iii. *Southern Region of Brazil*

At the regional level, the South region leads the volume of total articles, with emphasis on the expressive number of articles on the Socioeconomics Knowledge Area. The main article is by Rover, Genarro & Reselli (2016) on the perception of risk and consumer awareness in relation to food and the growing formation of social networks for the production and consumption

© 2022 Global Journals

of healthy foods, with significant results in innovation processes in the structure. of these networks.

The second highlighted discusses the relationship between farmer participation in a public promotion policy and agricultural diversification and family autonomy (Valencia, Wittman & Blesh, 2019) and the third analyzes the construction and dynamics of market structures and networks food alternatives (Schneider, Salvate & Cassol, 2016).

iv. *Northeast Region of Brazil*

The Northeast region is the second region in Brazil in number of articles. It has representation in all Knowledge Areas, with the three main articles in three different areas, Health, Environmental Sciences and Socioeconomics. The most important of these, Health, deals with animal pathology, reports for the first time the infection in goats and the second in infection in family farmers by mites of two species, *Eutrombicula alfreddugesi* (Oudemans) and *Eutrombicula batatas* (Linnaeus) (Faccini et al., 2017).

v. *Southeast Region of Brazil*

In the Southeast region, there is a diversity of Study Areas, as well as in the Northeast, with emphasis on two, Health and Public Policies. The two main articles are also, respectively, from these two areas. The first, on Health, assesses the relationship between exposure to pesticides and respiratory problems in workers and family members of family farming in the Rio de Janeiro State (Buralli et al., 2018) and the second, on Public Policies, addresses questions about the PNAE and evaluates the profile of foods in public calls for the program in the São Paulo State (Amorim, Rosso & Bandoni, 2016).

vi. *Northern Region of Brazil*

The northern region has a volume of articles concentrated in two Knowledge Areas: Agronomy and Geography. The most prominent article, by Geography, studies land use planning by the government in the savannah of the Amapá State, which is under increasing pressure for the expansion of soybean planting (Hilário et al., 2017). The second, Agronomy, portrays the traditional knowledge of the Wapichana and Macuxi indigenous peoples, facing the invasion of more than 30,000 ha of *Acacia mangium* (Willd.) plantation in the state of Roraima (Souza et al., 2018).

vii. *Midwest Region of Brazil*

The Midwest region, among the 5 regions of Brazil, appears with the lowest volume of articles, which does not mean being the least relevant in scientific production, as it has the article with the greatest impact among the 244 articles analyzed. This production is also the protagonist among the 5 regions of the country in the Area of Knowledge in Food Security. The article makes an interlocution between the Areas of Food Security and Public Policies, from the perspective of Food Sovereignty in food acquisition programs in Brazil, with the Zero Hunger program as a social welfare program and how it was able to create links between food and nutrition security with rural development initiatives (Wittman & Blesh, 2017).

f) Family Farming Trends Categories and Articles

We conclude, on Family Farming, that there are trends at 4 levels, Study Area, Knowledge Area, Macrocategories and Microcategories. In Study Area, they stand out in continental studies on Latin America and productions from Ecuador and Costa Rica. In Brazil, in order of relevance, studies at the national level, in the South, Northeast and Southeast regions, stand out. In the Areas of Knowledge, Socioeconomics, Public Policies and Food Security stand out. In the Macrocategories, Social and Solidarity Economy, Climate Change, Animal Production, Market Studies and Plant Production. In Microcategories, Monoculture, Agroecology, Milk Chain, Migration and PNAE.

g) The Social and Solidarity Economy: A Systematic review of the Literature

The Social and Solidarity Economy (ESS) can be seen today as a Research Field in Brazil (Silva, 2020) and is considered an effective instrument for transposing the Sustainable Development Goals in the territories (Utting, 2018). The ESS has an increasing number of academic productions, in practical experiences and articles referring to the construction of the theoretical-methodological bases for the consolidation of the ESS as an economic alternative to the prevailing hegemonic logic (Compère & Schoenmaeckers, 2021). This rise can be seen in advances in three spheres: political, socio-historical and academic.

h) The main debates in the political and social fields of SSE in Brazil

Regarding Solidarity Economy, the regulation on associations and cooperatives is expressed and still in force in the traditional Cooperativism Law (Law #5,764 of 1971), in the Civil Code (Law #10,406 of 2002) and Law Regulatory Framework for Civil Society Organizations (Law #13,019 of 2014. However, the SSE has consolidated itself in the public policy scenario, in the last decade, with a framework of laws and regulations approved, under development and in addition to the laws, for the consolidation of Solidarity Economic Enterprises (SEE) as a new paradigm of production and consumption.

One of these regulations is the institution of the National System of Fair and Solidarity Trade, established under Executive Decree #7,358 of 2010, referring to the organizational forms of the SSE in Brazil. In this law appear the first definitions of the terms "fair trade, alternative trade, solidary trade, ethical trade, ethical and solidary trade" and that these are

© 2022 Global Journals

"understood in the concept of fair and solidary trade" (BRASIL, 2010).

This debate about fair and solidary trade interests us a lot because, as already seen in the review of the literature on Family Farming, Agroecology is one of the main specific themes of the Socioeconomics Knowledge Area, in Macrocategories Market Studies and Social Economy and Solidarity, with fair and solidary trade running through the basic organization of the markets for agricultural and agroecological products, marketed by cooperatives and SSE associations.

As in FF, the achievements in the political sphere of the Social and Solidarity Economy go through a socio-historical process of social mobilization. In the 1990s, four events complemented each other as important milestones to consolidate the SSE as a new paradigm, both in society and in academia (Lechat, 2004; Silva, 2020).

i) The academic field of SSE

In the academic sphere, three works foster the construction of the theoretical bases of the Solidarity Economy, the first, already mentioned in this work, is the most cited work by Paul Singer, *Introdução à Economia Solidária* (Singer, 2002). Previous to this one, the work entitled *A Economia Solidária no Brasil: a autogestão como resposta ao desemprego* (Singer & Souza, 2000), also by Paul Singer in association with André Ricardo Souza, encompasses a set of experiences reported by researchers in Brazil. encompassing experiences of different natures reported by several national researchers.

Finally, as a result of debates raised at the II National Symposium of the University-Company on Self-Management and Participation, in 1998, the book *Economia Solidária: o desafio da democratização das relações de trabalho* by Neusa Maria Dal Ri, whose main contribution to the differentiation of traditional cooperativism (this one from the aforementioned cooperativism law), from the cooperativism of practical experiences and social movements (Silva, 2020).

Today, the Solidarity Economy, in the academy, presents itself as a paradigmatic field of scientific investigation, in the dialectic with practical experiences, social movements and the governmental agenda. About this academic production, it presents results that, even with the predominance of articles about experiences. On the one hand, the field of solidarity economy presents conceptual aspects such as self-management, associativism, solidarity as a productive factor and, on the other hand, criticisms about the theoretical consistency or social relevance of the experiences in this field are still latent (Silva, 2020).

The Social and Solidarity Economy incorporating the Social Economy into the framework of the Solidarity Economy, currently consists of a set of economic and social practices, production of goods and services, solidarity finance, exchanges, fair and solidarity trade, social currencies, among others. others. In the union between theory and praxis, SSE brings together different currents that influence thinking about the role and place of SSE as a transforming field of the capitalist mode of production (Morais and Bacic, 2020).

Latin American academic production, which combines the Social and Solidarity Economy in a single concept, has been concentrated in the last decade and has been consolidated, as well as in FF, in the last 5 years, with 58 articles between the years 2016-2020, against 14 articles from 2011-2015, totalling 74 articles in indexed journals, with open access.

Twenty-seven categories of analysis related to the articles were found, with 11 of these categories concentrating more than 60% of the articles (58 articles), which shows a concentration of production in the area in areas related to the social sciences (Economics; Social Sciences; Industrial Relations Labor; Management) and environmental sciences (Environmental Studies; Public Environmental Occupation Health; Environmental Science; Green Sustainable Science Technology).

In all, the 73 articles received 233 citations in these 5 years, excluding self-citations. Among these articles, 182 citations correspond to the 73 articles themselves, also excluding self-citations. This means, like Family Farming, that there is cohesion among the scientists who publish on the Social and Solidarity Economy in Latin America and Brazil.

In a detailed reading of the 73 filtered articles, 18 were excluded, with 8 of them (~47%) not having the Social and Solidarity Economy as their main theme, 5 of them (~29%) with an area of study without considering Latin America, 2 of them (~12%) were duplicate articles, and 2 of them (~12%) were not included among indexed journals. At the end of applying the exclusion criteria, a total of 56 indexed articles were obtained, with the Social and Solidarity Economy as an object of study, in Latin American countries, from 2016-2020 and open access.

j) Content analysis and categorization of valid ESS articles

As in Family Farming, the same 5 levels of incidence categories were established in all articles: Study Area, Knowledge Area, Macrocategory, Microcategory and transversally evaluated as a criterion of relevance, the total citations and per year.

In the Study Area, the Iberoamerica area was exceptionally considered due to the volume of productions in the relationship between the Iberian Peninsula and Latin America. Despite the significantly smaller volume of articles in relation to FF, the diversity of countries and Study Areas is slightly greater.

These were divided into the regions of the country, identifying the absence of productions from the

© 2022 Global Journals

North Region and only one production from the Midwest Region. Regarding Knowledge Areas, the same 8 areas were used as parameters for the classification and, despite the wide diversity in Study Areas, Knowledge Areas showed a concentration in Socioeconomics, with 36 (~64%) of 56 valid articles

k) The relationship between SSE Study Area and Knowledge Area in volume of articles and main references

i. *Iberoamerica*

In Ibero-American studies, 7 articles (12.5%) were found out of 56 valid ones, of which 6 were on Socioeconomic and 1 on Education. The construction of the theoretical-methodological bases of the concept are primarily to promote the construction of the concept, with emphasis on three articles.

The first and most relevant Ibero-American study in the Socioeconomic Knowledge Area, criticizes the development of the Social Economy in the last 30 years in Europe, with the third sector following paths of consolidation and economic development, instead of guarantees of integration social (Csoba, 2020).

The second article, also from Socioeconomic and with one of the authors already mentioned as relevant in the junction of the Social Economy and Solidarity Economy concept, addresses the importance of SSE as indispensable in the transition from conventional development models to the Good Living paradigm, in oriented strategies in 4 aspects: regulation, redistribution, resizing and decommodification of the economy (Eguiluz & Mendiguren, 2018).

A third, in the Education Knowledge Area, presents a proposal for cooperative education that articulates productive and educational practices, in the dialectic between action and reflection as a potentiating factor of the teaching and learning process, guided by principles of solidarity and social transformation (Alcantara, Sampaio & Uriarte, 2018).

ii. *Latin America*

In Latin American studies, 8 articles (~14%) were found out of 56 valid ones, of which half were on Public Policies and half on Socioeconomic. We highlight two articles of relevant impact in terms of total number of citations and citations/year.

One of them, the most expressive among the 56 articles, from the Public Policies Knowledge Area, promotes an inversion of the technicist view of the Circular Economy and passes, then, under the aspect that the authors declare themselves as a southern view, to focus on questions about the grassroots organizations linked to selective collection (Gutberlet et al. 2017).

The other also on Public Policies, from the Agriculture Knowledge Area, analyzes the SSE intergovernmental agenda in the processes of regional political cooperation of the Union of South American Nations (UNASUR) and MERCOSUR, as well as the implications of these in the structures of regional governance for social development (Saguier & Brent, 2017).

iii. *Argentina*

About the Argentine Study Area (exclusively), in the Socioeconomics Knowledge Area, a single article among the 56 addresses the debate on cryptocurrency speculation and social currencies in Argentina. It presents as a case the MonedaPAR, a digital currency created in 2017, based on blockchain technology. The article concludes that MonedaPAR can indeed offer solutions for leveraging credit, consumption, employment and strengthening cooperative ties (Pardo, 2020).

iv. *Colombia*

One study stands out in Colombia, with a theoretical basis, on the Socioeconomics Knowledge Area and that discusses the currents of influence and the characteristics of the Colombian Ecosol. It has as a result of analysis of Latin American currents and the Social and Solidarity Economy and despite plural and with multiple agents and social agencies about the concept, there is still no identity (De-Guevara, et al. 2018).

v. *Cuba*

One production reports the results of a participatory diagnosis on the contributions of a communication campaign for the formation of the Popular and Solidarity Economy in Cuba, in a consensus of some principles and values of the Popular and Solidarity Economy in Cuba (Bautista & Sardá, 2017).

vi. *Ecuador*

One study stands out in Ecuador, on the Socioeconomics Knowledge Area. It is about a review of development plans and theoretical propositions about the private ownership of the means of production, which emerged in the second half of the 20th century (Burneo & Sánchez, 2018).

vii. *México*

The main one, among the three scientific productions in Mexico, on Public Policies, talks about the inconsistencies of the development of technological innovation and social innovation in the scope of the so-called sugarcane cluster of Veracruz. It culminates in the finding that the social economy, in this context, is capable of reorganizing agro-industrial value chains for more sustainable development (Bono & Baranda, 2019).

viii. *Uruguay*

A single valid article from Uruguay, after applying the filtering methodology, on Socioeconomic, presents resistance strategies of social economy workers in the country, specifically, they work from the perspective of Recovered Companies as forms of

© 2022 Global Journals

collective entrepreneurship that disobeys the conventional order of unemployment. in the country (Castiñeira, 2020).

ix. *Brazil*

Unlike Family Farming, the Social and Solidarity Economy is concentrated in one Knowledge Area, Socioeconomic. Four recent articles are highlighted, two from Socioeconomic itself and two from Public Policies.

The most relevant promotes the theoretical-methodological bases of the Solidarity Economic Enterprise (EES) analysis category, supporting the concept of Alternative Self-Management Enterprises (EAA), which are more advanced enterprises from Ecosol's point of view, with the main function of guarantees income and work for the beneficiaries. (Gaiger, Ferrarini & Veronese, 2018).

x. *Northeast Region of Brazil*

Among the regions of Brazil, the Northeast region stands out in terms of quantity of productions, with predominance in the Socioeconomic Knowledge Area, containing six out of seven articles and another on Public Policies. Of these articles, one article stands out as a prominent bibliographic production, on the reflection of economic action and alternative management models based on proximity relationships in decision-making on the collective management of Community Banks (Rigo, Nascimento & Brandão, 2018).

xi. *Southern Region of Brazil*

Also expressive in number of articles, but with a diversity of Knowledge Areas, the South region has three articles on Socioeconomics, one on Health, one on Food Security and one on Agronomy. The main one, in the Health area, works on inclusion at work as a public policy tool for mental health, highlighting the generation of work and income (Ferro, Macedo & Loureiro, 2016).

xii. *Southeast Region of Brazil*

The Southeast region has a total production of five articles, two in the Public Policy Knowledge Area, two in Socioeconomics and one in Health. As in the South region, the article in Health in Social Assistance stands out, which in Campinas, municipality of São Paulo State, studies social inclusion through associative and cooperative work within the context of the Psychiatric Reform. (Da-Silva & Ferigato, 2017).

Another important article is the one on Public Policies, in the Traditional Peoples Macrocategory, which addresses the social organization and practices of artisanal fishermen in the Campos Basin (Campos, Timóteo & Arruda, 2018).

xiii. *Midwest and Northern Regions of Brazil*

The North region does not present any article at a prominent regional level. The Midwest region presents an article, as well as two of the three previous regions, in the Health and Social Assistance Macro category, in the Federal District, also in the discussion on work and income generation and mental health (Campos et al. 2015).

l) Categories and trend articles in the Social and Solidarity Economy

We conclude, on the SSE, that there are trends in the 4 levels, Study Area, Knowledge Area, Macrocategories and Microcategories. In Area of Study, at an international level, in an intermediate position of representation, they stand out in Iberoamerica, Latino America, and Mexico, and at a national level, with high representation and prominence of academic productions in Brazil and the Southern region. In the Areas of Knowledge, Socioeconomics stands out with extreme relevance and Public Policies with less relevance. In the Macrocategories, Theoretical Studies, Management Models, Family Farming and Solidarity Finance stand out. In the Microcategories, Productive Inclusion and Social Movements stand out.

m) Synthesis of the results and the intersections between Family Farming and the Social and Solidarity Economy

In summary, the trend at the intersection between FF and the SSE (Fig.2) has: i) as a consolidated Knowledge Area: productions on Socioeconomics, with a clear growth of productions on Productive Inclusion, Sustainable Development, and Indicators of Sustainability and ii) as Knowledge Areas on the rise: Food Security productions, mainly in productions on Organic Food and Agroecology; Public Policy productions on topics such as the PNAE, Social Transformations and Social Technologies.

In FF, from the Macrocategories, Social and Solidarity Economy, Climate Change, Animal Production, Market Studies, and Vegetable Production stand out, in addition to the Microcategories Monoculture, Agroecology, Milk Chain, Migration and PNAE. In the SSE, of the Macrocategories, the Theoretical Studies, Management Models, Family Farming and Solidarity Finance stand out, in addition to the Microcategories Productive Inclusion and Social Movements.

© 2022 Global Journals

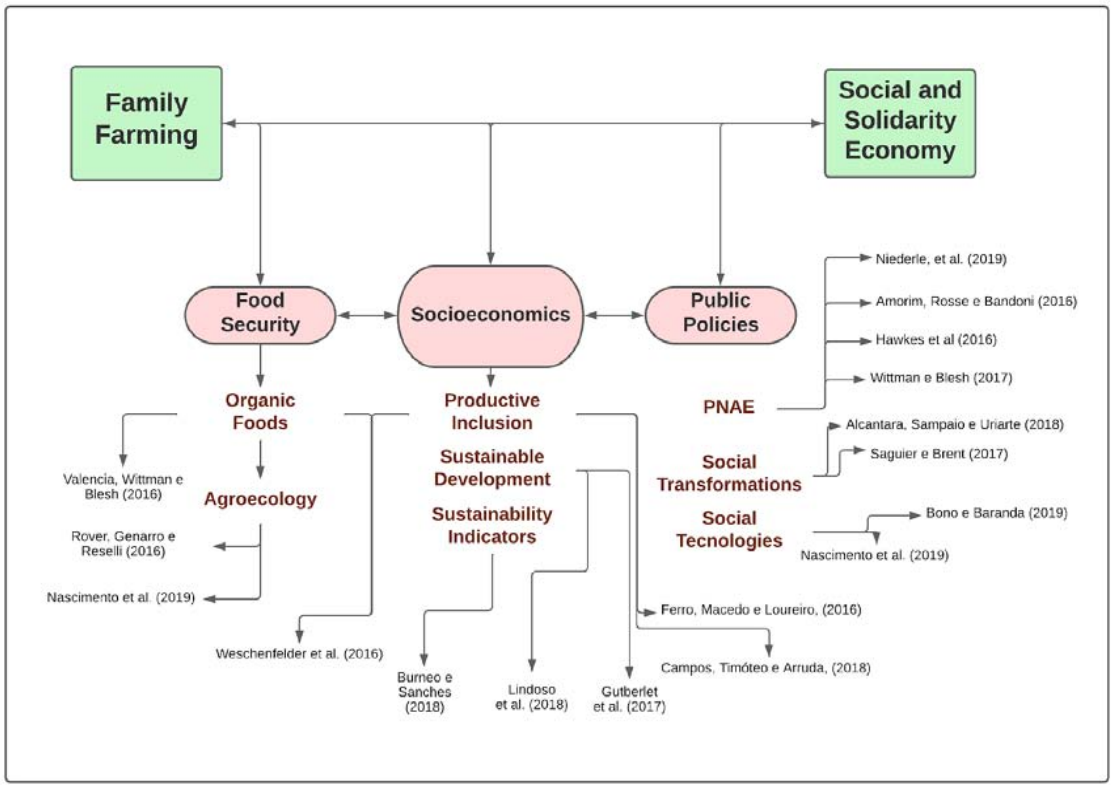

Fig. 2: The intersections of scientific production between FF and SSE

Based on this evidence, it is possible to affirm that both categories are on the rise in the academic environment, in addition to being constructions in a two-way street, both FF is important for the cohesion of the scientific production of the SSE, as well as the SSE is important for the cohesion of the scientific production of FF.

IV. Conclusions

In the rise of two genuinely Latin American categories at the international level, Family Farming and the Social and Solidarity Economy undergo a process of paradigmatic transition and emerge as two new scientific fields. Intersecting at various points, both categories begin their journey based on social movements and mobilizations, passing through the dissemination in the academy and, currently, they come to occupy a privileged space in the international political-economic agendas.

This study sought to analyse the trends of scientific production about both these categories, Family Farming and Social and Solidarity Economy in an initially national panorama, because they are nationally conceived categories, but because of their expansion, they presented regional and international representation. After executing the PRISMA method, we reached 244 articles from FF and 56 articles from SSE between 2016 and 2020.

The results indicated trends in scientific production in both these categories. In the Content Analysis phase to stratify into 4 categories (Study Areas, Knowledge Areas, Macrocategories and Microcategories). In FF, of the 12 Study Areas found, the following stand out: Brazil (studies at the national level), in the Northeast and South regions; of the 8 Areas of Knowledge found, the following stand out: Food Security, Socioeconomics and Public Policies; of the 12 Macrocategories found, the following stand out: Social and Solidarity Economy, Climate Change, Animal Production, Market Studies and Plant Production; and, of the 44 Microcategories, the following stand out: Monoculture, Agroecology, Milk Chain, Migration and PNAE.

Regarding the trends of each category of the Social and Solidarity Economy, it was concluded that of the 13 Study Areas found, the following stand out: Brazil (studies at the national level), the South and Southeast regions; of the 7 Areas of Knowledge found, the following stand out: Socioeconomics as a large category and the absence of productions in Environmental Sciences; of the 10 Macrocategories found, the following stand out: Theoretical Studies, Management Models, Family Farming and Solidarity Finance; and of the 17 Microcategories, the following stand out: Productive Inclusion and Social Movements.

Based on this evidence, it is possible to affirm that both categories are on the rise in the academic

© 2022 Global Journals

environment, one being necessary to the other. Family Farming can now be considered an established paradigm at the national level and the Social and Solidarity Economy, in turn, presents itself as a new paradigm at the national level and has already permeated academic discussions at the Ibero-American level.

Finally, in response to the research question in this chapter about "what are the theoretical-methodological intersections and the trend of scientific production on the categories Social and Solidarity Economy and Family Farming?", the trend at the intersection between FF and SSE has: i) as a consolidated Area of Knowledge: productions on Socioeconomics, with a clear growth of productions on Productive Inclusion, Sustainable Development and Sustainability Indicators and ii) as Areas of Knowledge on the rise: productions on Food Security, mainly on topics such as Organic Foods and Agroecology; Public Policy productions on topics such as the PNAE, Social Transformations and Social Technologies.

In short, it was found that the scientific production on these two categories is, in fact, consolidating in recent years, as well as the intersection between them has been configured as an academic, social and political field relevant to the achievement of the objectives of sustainable development of the Global Agenda 2030.

Acknowledgments

This article received financial support via Public Notice PAINTER 003/2020 from the public agency FAPEAM and is the result of work supported by the public agency CAPES.

References Références Referencias

1. Alcantara, L. C. S., Sampaio, C. A. C., Uriarte, L. (2018). Experiencia Cooperativa de Mondragón: la educación cooperativa como un proceso de transformación social. CIRIEC-España, Revista de Economía Pública, Social y Cooperativa, 93, 181-209.
2. Amorim, A. L. B. D., ROSSO, V. V. D., & Bandoni, D. H. (2016). Acquisition of family farm foods for school meals: Analysis of public procurements within rural family farming published by the cities of São Paulo state. Revista de Nutrição, 29, 297-306.
3. April-Lalonde, G., Latorre, S., Paredes, M., Hurtado, M. F., Muñoz, F., Deaconu, A., ... & Batal, M. (2020). Characteristics and motivations of consumers of direct purchasing channels and the perceived barriers to alternative food purchase: A cross-sectional study in the Ecuadorian Andes. Sustainability, 12(17), 6923.
4. Bachelard, G. (1996). A formação do espírito científico. Rio de janeiro: Contraponto, 1938.
5. Baumel, A. & Basso, L. C. (2004). Agricultura familiar e a sustentabilidade da pequena propriedade rural. In: CAMARGO, G., CAMARGO FILHO, M. & FÁVARO, J. L. (Eds.) Experiências em desenvolvimento sustentável e agricultura familiar. Guarapuava – Paraná: Ed. Unicentro.
6. Bautista, L. A. N., & Sardá, H. T. (2017). Economía Popular Solidaria: Un acercamiento desde el contexto cubano actual/Popular Solidarity Economy: an Approach from the Current Cuban Context. Estudios del Desarrollo Social: Cuba y América Latina, 5(3), 100-115.
7. Berdegue, J. (2020). Open letter from Julio Berdegue, FAO Regional Representative. Decade of Family Farming. FAO in Brazil: Food and Agriculture Organization of the United Nations. 2019. Available at: www.fao.org/brasil/noticias/detail-events/pt/c/1206221/.
8. BM – Banco Mundial. (2020a). Informe semestral de la región de América Latina y el Caribe: La economía en los tiempos del COVID-19.
9. BM - Banco Mundial. (2020b). Agricultura - Datos Agricultura, valor agregado (% del PIB) - Brazil. Datos sobre las cuentas nacionales del Banco Mundial y archivos de datos sobre cuentas nacionales de la OCDE. 2020.
10. Bono, J. R. G., & Baranda, M. R. T. (2019). Los valores de la Economía Social como impulsores del cambio en clústeres con fuerte fragmentación del conocimiento: el caso de la caña de azúcar de Veracruz (México).
11. BRASIL, Sistema Nacional do Comércio Justo e Solidário. Ministério do Trabalho e Emprego. Decreto Executivo Nº 7.358 de 17 de novembro de 2010.
12. BRASIL - Ministério da Saúde. Secretaria de Ciência, Tecnologia e Insumos Estratégicos. (2012). Departamento de Ciência e Tecnologia. Diretrizes metodológicas: elaboração de revisão sistemática e metanálise de ensaios clínicos randomizados. Série Normas e Manuais Técnicos. Ministério da Saúde, Secretaria de Ciência, Tecnologia e Insumos Estratégicos, Departamento de Ciência e Tecnologia. Brasília: Editora do Ministério da Saúde, 92p.
13. Buralli, R. J., Ribeiro, H., Mauad, T., Amato-Lourenço, L. F., Salge, J. M., Diaz-Quijano, F. A., ... & Guimarães, J. R. D. (2018). Respiratory condition of family farmers exposed to pesticides in the state of Rio de Janeiro, Brazil. International journal of environmental research and public health, 15(6), 1203.
14. Burneo, V. F. G., & Sánchez, G. M. D. (2018). Sistemas de relaciones de producción de participación social y comunitaria como base del desarrollo sustentable. Cooperativismo y Desarrollo: COODES, 6(2), 125-140.

© 2022 Global Journals

15. Campos, I. D. O., Kikuchi, P., Jabur, P. D. A. C., Magalhães, Y. B., Rebouças, F., & Pinheiro, G. M. (2015). Saúde mental e economia solidária: a experiência de usuários e trabalhadores de um CAPS II. Cadernos de Terapia Ocupacional Da UFSCar, 23(2).
16. Campos, M. M., Timóteo, G. M., & Arruda, A. P. S. N. D. (2018). A dinâmica da pesca artesanal na Bacia de Campos: organização social e práticas em economia solidária entre os pescadores artesanais. Revista Crítica de Ciências Sociais, (116), 71-102.
17. Carvalho, E. S., & Lago, S. M. S. (2019). A apropriação de inovações na agricultura familiar: uma revisão sistemática da literatura. Revista Eletrônica Competências Digitais para Agricultura Familiar, 5(2), 81-119.
18. Castiñeira, A. R. (2020). La economía social y la recuperación del trabajo en Uruguay. REVESCO: revista de estudios cooperativos, (135), 31-40.
19. Cazella, A. A., Dorigon, C., Nesi, C. N., & Eloy, L. (2020). Sistemas agrícolas e alimentares de famílias rurais: análise da multilocalização familiar na região Oeste de Santa Catarina. Estudos Sociedade e Agricultura, 28(1), 21.
20. Compère, C., Sak, B., & Schoenmaeckers, J. (2021). Mapping International SSE Mapping Exercises. UNTFSSE Knowledge Hub Working Paper. Geneva: UN Inter-Agency Task Force on Social and Solidarity Economy (UNTFSSE).
21. CONAES - Conferência Nacional de Economia Solidária. (2014). Texto de Referência da 3ª edição - Contextualização e Balanço Nacional. Secretaria Nacional de Economia Solidária e Ministério do Trabalho e Emprego, 3.
22. Csoba, J. (2020). A szociális gazdaságtól a szolidáris gazdaságig–a helyi gazdaságfejlesztési modell átalakulása= From social economy to solidarity economy-Model change in the development of the local economy. Tér és Társadalom, 34(4), 71-99.
23. D'Ambrosio, U., & Puri, R. K. (2016). Foodways in transition: food plants, diet and local perceptions of change in a Costa Rican Ngäbe community. Journal of Ethnobiology and Ethnomedicine, 12(1), 1-32.
24. Da-Silva, A. P. D., & Ferigato, S. H. (2017). Saúde mental e trabalho: diálogos sobre direito, desejo e necessidade de acesso/Mental health and work: dialogues on rights, desire, and need for access. Cadernos Brasileiros de Terapia Ocupacional, 25(4).
25. De-Guevara, R. D. L., Prieto, A. V., Blanco, L., Roa, E., Cáceres, L. S., & Vargas, L. A. (2018). Características de la economía solidaria colombiana. Aproximaciones a las corrientes influyentes en Colombia. CIRIEC-Espana, (93), 85-113.
26. Defourny, J., & Monzón, J. L. (Eds.). (1992). Economie sociale, entre Economie Capitaliste et Economie Publique. The Third Sector, Cooperative, Mutual and Nonprofit Organisations, De Boeck-Wesmael, Bruxelles.
27. Draperi, J. F. (2013). Économie sociale, économie solidaire, entrepreneuriat social. Des projets politiques et économiques différents. Vers une théorie de l'économie sociale et solidaire. Collection: Droit & économie sociale et solidaire, 17-32.
28. Eguiluz, U. V., & de Mendiguren, J. C. P. (2019). La economía social y solidaria como vía para el buen vivir. Revista iberoamericana de estudios de desarrollo= Iberoamerican journal of development studies, 8(1), 106-136.
29. Faccini, J. L. H., Santos, A. C. G., Santos, S. B., Jacinavicius, F. D. C., Bassini-Silva, R., & Barros-Battesti, D. M. (2017). Trombiculiasis in domestic goats and humans in the state of Maranhão, Brazil. Revista Brasileira de Parasitologia Veterinária, 26, 104-109.
30. FAO-IFAD. (2019). United Nations Decade of Family Farming 2019-2028. Global Action Plan. Rome.
31. Ferro, L. F., Macedo, M., & Loureiro, M. B. (2015). Economia Solidária, Saúde Mental e a prática do terapeuta ocupacional: relatos de participantes de um grupo de geração de trabalho e renda. Cadernos Brasileiros de Terapia Ocupacional, 23(1).
32. França-Filho, G. C. (2002). Terceiro setor, economia social, economia solidária e economia popular: traçando fronteiras conceituais.
33. França-Filho, G. C. (2006). Ação pública e economia solidária: uma perspectiva internacional. Editora da UFRGS.
34. Fuller, A. M. (1990). From part-time farming to pluriactivity: a decade of change in rural Europe. Journal of rural studies, 6(4), 361-373.
35. Gaiger, L. I. (2002). A economia solidária diante do modo de produção capitalista. São Leopoldo.
36. Gaiger, L. I. (2003). A Economia Solidária e a Revitalização do Paradigma Cooperativo. Revista Brasileira de Ciências Sociais, 28(82), 211-259.
37. Gaiger, L. I. (2014). A economia solidária no Brasil: uma análise de dados nacionais. São Leopoldo, Oikos.
38. Gaiger, L. I. (2019). La lucha por el marco legal de la economía solidaria en Brasil: déficit republicano y ethos movimentalista. Cultura Económica, 37(97), 65-88. 2019.
39. Gaiger, L. I., Ferrarini, A., & Veronese, M. (2018). O Conceito de Empreendimento Econômico Solidário: Por uma Abordagem Gradualista. Revista de Ciências Sociais, Rio de Janeiro, 61(1), 137-169.
40. Gaiger, L. I., & Kuyven, P. S., (2020). Economia Solidária e Trajetórias de Trabalho: uma visão

© 2022 Global Journals

retrospectiva a partir de dados nacionais. São Paulo: Revista Brasileira de Ciências Sociais, 35(103).
41. Gaspari, L. C., Khatounian, C. A., & Marques, P. E. M. (2018). The role of agriculture among pluriactive families settled around on metropolitan region: the case of the Milton Santos settlement in Americana and Cosmópolis/SP/El. REVISTA NERA, (41), 85-101.
42. Grisa, C., & Schneider, S. (2014). Três gerações de políticas públicas para a agricultura familiar e formas de interação entre sociedade e estado no Brasil. Revista de economia e sociologia rural, 52, 125-146.
43. Gutberlet, J., Carenzo, S., Kain, J. H., & Mantovani, A. M. A.(2017). Waste picker organizations and their contribution to the circular economy: Two case studies from a global south perspective. Resources, 6(4), 52.
44. Haggblade, S., Hazell, P., & Reardon, T. (2010). The rural non-farm economy: Prospects for growth and poverty reduction. World development, 38 (10), 1429-1441.
45. Hawkes, C., Brazil, B. G., Castro, I. R. R. D., & Jaime, P. C. (2016). How to engage across sectors: lessons from agriculture and nutrition in the Brazilian School Feeding Program. Revista de saude publica, 50.
46. Hilário, R. R., de Toledo, J. J., Mustin, K., Castro, I. J., Costa-Neto, S. V., Kauano, É. E., ... & de Carvalho, W. D. (2017). The fate of an Amazonian savanna: government land-use planning endangers sustainable development in Amapá, the most protected Brazilian state. Tropical Conservation Science, 10, 1940082917735416.
47. Kraychete, G. (Ed.). (2000). Economia dos setores populares: entre a realidade e a utopia. Salvador: Ed. Vozes.
48. Laville, J. L. (1994). L'économie solidaire: une perspective internationale, Paris: Desclée de Brouwer, coll. Sociologie économique.
49. Laville, J. L. (2004). El marco conceptual de la economía solidaria. In. Economía social y solidaria. Una visión europea, 207-236.
50. Lechat, N. M. P. Trajetórias intelectuais e o campo da economia solidária no Brasil. 2004. Thesis (Doctorate) – Instituto de Filosofia, Letras e Ciências Humanas, Universidade Estadual de Campinas, Campinas, 2004.
51. Manzanal, M., & Schneider, S. (2011). Agricultura familiar y políticas de desarrollo rural en Argentina y Brasil (análisis comparativo, 1990-2010). Revista Interdisciplinaria de Estudios Agrarios, 34(1), 35-71.
52. Marques, V. D. A. (2007). Aspectos orçamentários e financeiros da reforma agrária no Brasil 2000-2005 (No. 333.3181 M357). Ministerio do Desenvolvimento Agrario, Brasilia (Brasil) Instituto Nacional de Colonizacao e Reforma Agrária, Brasília, DF (Brasil).
53. Mattei, L. (2008). Pluriatividade no contexto da ruralidade contemporânea: evolução histórica dos debates sobre o tema. Revista Econômica do Nordeste, 39(3), 411-422.
54. Mendiguren, J. C. P., Etxezarreta, E.; Guridi, L. (2009). Economía Social, Empresa Social y Economía Solidaria: diferentes conceptos para un mismo debate. Papeles de Economía Solidaria, (1), 1-41.
55. Mendiguren, J. C. P., & Etxezarreta, E. (2015). Sobre el concepto de economía social y solidaria: aproximaciones desde Europa y América Latina. Revista de economía mundial, (40), 123-143.
56. Milhorance, C., Le Coq, J. F., Sabourin, E., Andrieu, N., Mesquita, P., Cavalcante, L., & Nogueira, D. (2021). A policy mix approach for assessing rural household resilience to climate shocks: Insights from Northeast Brazil. International Journal of Agricultural Sustainability, 1-17.
57. Monzón, J. L. (2003). Cooperativismo y Economía Social: perspectiva histórica. CIRIEC-ESPAÑA, Revista de economía pública, social y cooperativa, 44, 9-32.
58. Morais, L. P. (2013). As políticas públicas de Economia Solidária (ESOL): avanços e limites para a inserção sociolaboral dos grupos-problema. Campinas: IE-UNICAMP (Tese de Doutorado).
59. Morais, L. P. (2014). Social and Solidarity Economy and South-South and Triangular Cooperation in Latin America and the Caribbean: Contributions to Inclusive Sustainable Development. Social and solidarity economy reader: towards inclusive and sustainable development. Geneva, Swiss: Internacional Labour Office, 67–94.
60. Morais, L. P., & Bacic, M. J. (2020). Social and Solidarity Economy and the need for its entrepreneuring ecosystem: current challenges in Brazil.
61. Neves, M. D. C. R., Freitas, C. O., Figueiredo-Silva, F., Moura-Costa, D. R., & Braga, M. J. (2020). Does Access to Rural Credit Help Decrease Income Inequality in Brazil?. Journal of Agricultural and Applied Economics, 52(3), 440-460.
62. OCB – Organização das Cooperativas do Brasil. (2019). Anuário do Cooperativismo Brasileiro. Brasília: Sistema OCB Núcleo de Informações e Mercado.
63. OXFAM Brasil. (2020). Negócios e COVID: Poder e Lucros na Pandemia. OXFAM Brasil: Justiça Social e Econômica. 2020. Available at: https://www.oxfam.org.br/justica-social-e-economica/poder-lucros-e-pandemia/.
64. OXFAM Brasil. (2021). O vírus da fome se multiplica: uma receita mortal misturando conflitos armados, Covid-19 e a crise climática acelera a

© 2022 Global Journals

fome no mundo. Briefing de Mídia da OXFAM. 23 pp., 2021. Available at: https://d2v21prk53tg5m.cloudfront.net/wp-content/uploads/2021/07/relatorio_The_Hunger_Virus_sem_embargo-1.pdf.
65. Pardo, E. C. (2020). MonedaPAR: una alternativa argentina para la economía social y solidaria. REVESCO: revista de estudios cooperativos, (135), 21-30.
66. Quicaña, E. (2020). Efectos de la COVID-19 en la economía rural de América Latina. Organización Internacional del Trabajo - Panorama Laboral en Tiempos de la COVID-19. Nota técnica regional.
67. Rigo, A. S., Nascimento, I. R. T., & Brandão, P. D. M. (2018). Tal Pai, Tal Filho? Decisões coletivas tendo em conta relações familiares. Administração: Ensino e Pesquisa, 19(1), 135-160.
68. Rover, O. J., De Gennaro, B. C., & Roselli, L. (2016). Social innovation and sustainable rural development: The case of a Brazilian agroecology network. Sustainability, 9(1), 3.
69. Sá, J. (2016). Economia Social: algumas precisões. In: FERNANDES, J. (Ed.) A Economia Social em Portugal – Necessidades, perspectivas e fontes de financiamento. Porto, ed. PPE, 32-37.
70. Sá, J. (2017). Economia Social: da crise às oportunidades. In: SOUZA, A. & ZANIN, M. (Eds.) A Economia Solidária e os desafios globais do trabalho. São Carlos – SP, Ed. EdUFSCar, 73-84.
71. Sabourin, E. (2009). Camponeses do Brasil entre a troca mercantil e a reciprocidade. Rio de Janeiro: Garamond. Coleção Terra Mater.
72. Sabourin, E. (2017). Origens, evolução e institucionalização da política de agricultura familiar no Brasil. In DELGADO, Guilherme Costa & BERGAMASCO, Sonia Maria Pessoa Pereira (Eds.) Agricultura familiar brasileira: desafios e perspectivas de futuro. Brasília: Ministério do Desenvolvimento Agrário, 263-289.
73. Sacco-Dos-Anjos, F. (2003). Agricultura Familiar, pluriatividade e desenvolvimento rural no Sul do Brasil. Pelotas: EGUFPEL, 374p.
74. Saguier, M., & Brent, Z. (2017) Social and Solidarity Economy in South American regional governance. Global Social Policy: An Interdisciplinary Journal of Public Policy and Social Development, 17(3), 259–278.
75. Schneider, S. (2003). Teoria social, agricultura familiar e pluriatividade. Revista brasileira de ciências sociais, 18(51), 99-122.
76. Schneider, S. (2009). A pluriatividade no meio rural brasileiro: características e perspectivas para investigação. In GRAMMONT, Hubert Carton & MARTINEZ-VALLE, Luciano (Eds.) La pluriactividad en el campo latinoamericano. 1ª ed. Quito/Equador: Ed. Flacso - Serie FORO, 132-161.
77. Schneider, S., Salvate, N., & Cassol, A. (2016). Nested markets, food networks, and new pathways for rural development in Brazil. Agriculture, 6(4), 61.
78. Silva, S. P. (2020) O Campo de Pesquisa em Economia Solidária no Brasil: histórico, abordagens metodológicas e dimensões analíticas. In: SILVA, S. P. Dinâmicas da Economia Solidária no Brasil: Organizações Econômicas, Representações Sociais e Políticas Públicas. IPEA: Brasília, pp. 19-44.
79. Singer, P. (1998). Globalização e desemprego: diagnóstico e alternativas. Contexto.
80. Singer, P. (2002). Introdução à economia solidária. Fundação Perseu Abramo.
81. Singer, P., & Souza, A. R. (Eds.). (2000). A economia solidária no Brasil: a autogestão como resposta ao desemprego. Editora Contexto.
82. Souza, A. B. D., Fornazier, A., & Delgrossi, M. E. (2020). Sistemas agroalimentares locais: possibilidades de novas conexões de mercados para a agricultura familiar. Ambiente & Sociedade, 23.
83. Souza, A. O., Chaves, M. D. P. S. R., Barbosa, R. I., & Clement, C. R. (2018). Local ecological knowledge concerning the invasion of Amerindian lands in the northern Brazilian Amazon by Acacia mangium (Willd.). Journal of ethnobiology and ethnomedicine, 14(1), 1-14.
84. UN – United Nations. Objetivos de Desenvolvimento Sustentável. 2018. Disponível em https://nacoesunidas.org/pos2015/, Acesso em 10/10/2020.
85. Utting, P. (2018). Achieving the sustainable development goals through social and solidarity economy: Incremental versus transformative change. UN Inter-Agency Task Force on Social and Solidarity Economy.
86. Valencia, V., Wittman, H., & Blesh, J. (2019). Structuring markets for resilient farming systems. Agronomy for Sustainable Development, 39(2), 1-14.
87. Vergara-Camus, L., & Kay, C. (2017). The agrarian political economy of left-wing governments in Latin America: Agribusiness, peasants, and the limits of neo-developmentalism. Journal of Agrarian change, 17(2), 415-437.
88. Vidal, M. J. S., & García, G. F. (2006). Aspectos relevantes de la investigación jurídica en economía social. CIRIEC-España, revista de economía pública, social y cooperativa, (56), 188-223.
89. Wittman, H., & Blesh, J. (2017). Food Sovereignty and Fome Zero: Connecting Public Food Procurement Programmes to Sustainable Rural Development in Brazil. Journal of Agrarian Change, 17(1), 81-105.

© 2022 Global Journals