Volume 21 Issue 37
Originally issued as H6



Global Journal of human-social science: H
Interdisciplinary
Volume 21 Issue 6 Version 1.0 Year 2021
Type: Double Blind Peer Reviewed International Research Journal
Publisher: Global Journals
Online ISSN: 2249-460x & Print ISSN: 0975-587X

A Study on the Factors Influencing Student's Acceptance of Learning Management Systems: A Case of University of Perpetual Help System Pueblo De Panay

By Ace N. Bombaes
University of Perpetual Help System-Pueblo de Panay

Abstract- The utilization of Learning Management System (LMS) has been given much emphasis especially during the COVID-19 pandemic period and has become a common phenomenon during the new normal. This study examined the factors that influence LMS adoption among the students. Drawing upon the model of technological acceptance (TAM), five factors have been identified such as facilitating conditions (FC), perceived enjoyment (PE), perceived service quality (SQ), perceived value (PV), and satisfaction (SAT) in successful acceptance of LMS as an observational viewpoint from the of the University of Perpetual Help System – Pueblo de Panay. The study used quantitative with the support of SPSS, SEM, multi-level linear regressions, and regression analysis. The study will add value to the growing figures of investigation on TAM by measuring the factors and their impact on LMS adoption.

Keywords: learning management system (LMS), moodle, technology acceptance model (TAM), facilitating conditions, perceived enjoyment, perceived service quality, perceived value, satisfaction.

GJHSS-H Classification: FOR Code: 930199



Strictly as per the compliance and regulations of:



© 2021. Ace N. Bombaes. This research/review article is distributed under the terms of the Attribution-NonCommercial-NoDerivatives 4.0 International (CC BY-NC-ND 4.0). You must give appropriate credit to authors and reference this article if parts of the article are reproduced in any manner. Applicable licensing terms are at https://creativecommons.org/licenses/by-nc-nd/4.0/.

A Study on the Factors Influencing Student's Acceptance of Learning Management Systems: A Case of University of Perpetual Help System Pueblo De Panay

Ace N. Bombaes

Abstract- The utilization of Learning Management System (LMS) has been given much emphasis especially during the COVID-19 pandemic period and has become a common phenomenon during the new normal. This study examined the factors that influence LMS adoption among the students. Drawing upon the model of technological acceptance (TAM), five factors have been identified such as facilitating conditions (FC), perceived enjoyment (PE), perceived service quality (SQ), perceived value (PV), and satisfaction (SAT) in successful acceptance of LMS as an observational viewpoint from the of the University of Perpetual Help System – Pueblo de Panay. The study used quantitative with the support of SPSS, SEM, multi-level linear regressions, and regression analysis. The study will add value to the growing figures of investigation on TAM by measuring the factors and their impact on LMS adoption. The study will benefit the University. It is therefore recommended that the said factors like SQ, FC, PE should be given much focus and emphasis since they influence SAT and PV that play a vital role towards technology adoption. SAT defines Bi whereas PV acts a more significant role which signifies that it has more influence on the intentions to use than what satisfaction does. The research reaffirms significance impact of this on technology adoption, thus building a relevant and heavy association pertinent to LMS adoption.

Keywords: learning management system (LMS), moodle, technology acceptance model (TAM), facilitating conditions, perceived enjoyment, perceived service quality, perceived value, satisfaction.

I. Introduction

Innovation is the keystone and foundation of change especially in education and it increases effectiveness, competitiveness and efficiency of services and establish unique forms of participation which can heard, influence the success of a learning institution towards achieving its national and global agendas (Haas et al., 2009).

During the COVID-19 pandemic, many schools had to adapt to the new normal. In order to make it happen, they invested in learning management system that can support students' learning activities by providing an extensive and integrated range of services and tools for learners (Zanjani et al., 2017). It has become very crucial since this period disabled many functions and movements were limited. Students had to stay at home in a secure environment for them to be safe from any harm brought by this contagious virus. Through LMS, teachers could still facilitate learning and organise learning contents; students could still learn and submit their learning outputs, requirements like projects, and assignments. What is more, both teachers and students could provide feedback and insights to one another for the betterment of all learning contents and outcomes towards achieving one goal which is learning and applying all the learned concepts. Moreover, LMS helps teachers in providing and organising new teaching and learning contents and methods which help students to learn and perform better (Panay et al., 2019).

This study delves on the identified factors that influence student's LMS adoption. Technology Acceptance Model (TAM) is used as its guiding model that explains as to how adoption is made possible. Five factors have been identified like facilitating conditions (FC), perceived enjoyment (PE), perceived service quality (SQ), perceived value (PV), and satisfaction (SAT) in successful acceptance of LMS as an observational viewpoint from the of the University of Perpetual Help System – Pueblo de Panay. All data were collected from students of the University of Perpetual Help System-Pueblo de Panay Campus, Roxas City, Capiz, Philippines.

a) Learning Management System

Learning Management Systems (LMS), also known as Course Management Systems (CMS) or Virtual Learning Environment (VLE) (Bahsh & Daoud, 2016) & (Asiri et al., 2012), is a set of software tools that are specifically designed to support the educational process. The University has been using its own Moodle (Rakic et al., n.d.) that supports learning and training. It provides custom learning environments for students as well as to teachers in creating, providing, and organising learning contents. It a learning platform where students and teacher can collaboratively and actively interactive with each other. It has all the important features that enable students to review the class calendar, submit

Author: MPA, University of Perpetual Help System-Pueblo de Panay, Philippines. e-mail: bombaes_21@yahoo.com

© 2021 Global Journals

assignments, and take quizzes. This LMS enables students to have a great access to all available learning materials and also enables the University to monitor student's learning progress and evaluate the learning process.

The effectiveness of this LMS has already been studied and proven effective in teaching and training. As studied by (Goyal & Tambe, 2015), their findings revealed that there was a favourable feedback from the students and a successful adoption of MOODLE by the teachers. A similar study was conducted by (Costa et al., 2012) which also reveals that Moodle has a great potential and has been recognized by many student the importance of the use of other functionalities of this platform in order to promote the success of the teaching/learning process.

b) Research Model

The study adopted Technology Adoption Model (TAM) by Davis (1986) since it further explains and describes the adoption process and as to how the identified factors influence and enable the success LMS adoption. By using this model, the study is able to point out and explore the factors that determine and predict student's intention towards LMS adoption.

The figure shows the relationship of PE to SAT and PV, the relationship of SQ to SAT and PV, the relationship of FC to SAT and PV, the relationship of SAT towards Bi, and the relationship of PV towards Bi. Two key moderating factors (PV, SAT) have been identified for they have significant in conjunction with this model.

II. Literature Review

a) Perceived Enjoyment (PE)

Perceived enjoyment is regarded as the level of pleasure as to how individuals perceive something they receive or from using an application. This is further explored and explained by previous studies which support that perceived enjoyment influences technology-aided adoption thus giving the affirmative effect on satisfaction and perceived value (Venkatesh, 2000). PE in this investigation is regarded as the level of pleasure that consumers perceive from using M-coupon applications and can predict student's degree of enjoyment to do or repeat an amusing activity. PE has a favorable link to student's motive to learn and perform thus defining the capability of a certain system to keep student from utilizing the system (Asmi et al., 2017). Moreover, student perceives using something e.g. LMS when it meets the expectations and value of how much he pays for it.

b) Perceived Service Quality (PSQ)

It is included as a factor in this study in order to gauge the student's degree of perception for it leads to student's LMS adoption. Previous studies defined SQ as an influencing factor that leads to successful LMS adoption when student feels like the expectations are met and the service it provides pleases students thus contributing to the overall judgment or assessment which lead to favorable response based on the given service (A. N. Bombaes et al., 2019). Furthermore, service quality refers to the quality of supports provided to the system's end-users (Ghazal et al., 2018).

c) Perceived Facilitating Conditions (PFC)

Facilitating conditions can be any technical, instructional support and infrastructure needed for LMS (Venkatesh et al., 2012). Previous investigations display that FC have an essential impact on student's behavioral intention towards the adoption of technology (Jeng & Tzeng, 2012). FC is a strong predictor for forecasting technology acceptance and usage.

d) Perceived Satisfaction (SAT)

It is defined as the overall affective acknowledgment built upon the performance of a service after expenditure (Oliver, 1980). Moreover, satisfaction is defined as the individual's perceptions of the extent to which the system meets their needs and expectations (Ghazal et al., 2018). Therefore, this is a strong determinant which can predict the success of student's LMS adoption.

e) Perceived Value (PV)

It is a powerful determining factor that leads to LMS adoption. An investigation recommends that PV may be a superior predictor of reacquiring than either SQ or SAT (Cronin et al., 2000). Students feel that it is worth the amount of they paid for since the expectations and needs of the students have been met. It is a strong that leads to students LMS adoption.

f) Behavioural Intention (Bi)

It refers to individual motives to use a particular technology just like LMS that directly affects actual usage (Hussein, 2018). It is an individual's intention to act on a certain situation after receiving, judging or evaluating the benefits, advantages and gains from a certain application, technology, object or activity (A. Bombaes, 2017).

III. Research Design and Method

The study is a conclusive research since the study wants to reveal the links or relationships of the identified towards student's intention. It is a quantitative research since it utilises numerical and experimental tools in coming up with results. The study uses survey as its strategy in gathering data. The structured questionnaire is used to reveal the strong foundation of building behavioural intention towards LMS adoption.

a) Data Collection

All questionnaires were done and conducted via google form and were given to students of the University of Perpetual Help System-Pueblo de Panay; items focused on measuring the attitude and is equipped with

© 2021 Global Journals

seven-point Likert Scale as part of quantitative instrument. Quantitative was also used to analyze hypotheses in experiments because of its ability to measure data using statistics.

For statistical analysis the data were collected from Senior High School students who are active users of LMS. There were 160 participants and they were given a structured questionnaire. The questionnaire was used to perform correlation analysis to test the relationship of every variable and Cronbach's Alpha was used to determine the scale reliability. This study is quantitative with the support of SPSS.

b) Data Analysis

As part of statistical approach, this study used SPSS which aims to understand the relationships and behavior of respondents as regards LMS adoption. Descriptive statistical tools were used to describe the relations among the identified factors available in research.

c) Analysis and Findings

The analysis aims to seek answers that validate the proposed hypotheses and model of the study. The proposed hypotheses are shown below.

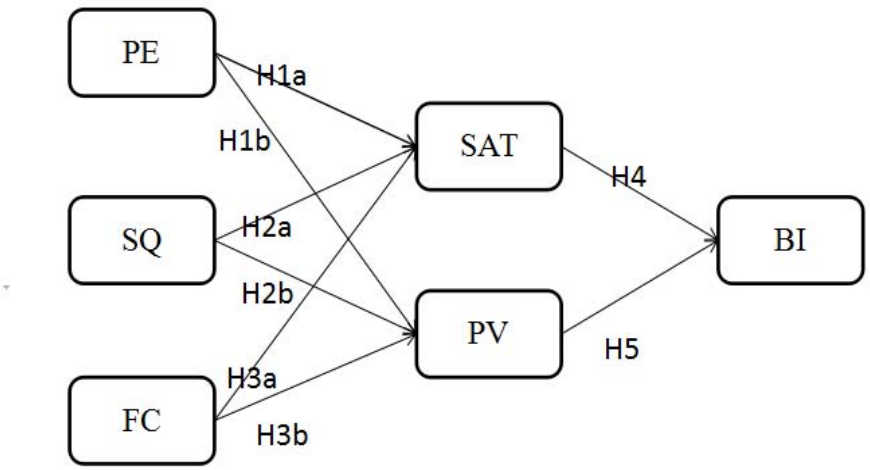

Figure 1: The Proposed Model and Hypotheses.

Figure delves on the structural model evaluation. SEM is acknowledged by many researchers and academicians for its multi-dimensional functions in measuring and analyzing relationships between and among factors. This model can judge the qualities of a component and its interconnectedness and associations among attributing determinants and variables. The investigation used a multi-level linear regression modeling, co-variance-based SEM facilities of AMOS. This investigation pursues a two-step path to assess the model. The evaluation was first analyzed through estimating the construct validity by performing a confirmatory factor analysis (CFA); then the introduced model was assessed by judging structural equation model (SEM).

This part presents construct reliability and convergent reliability, and then followed by discriminant validity analysis. The investigation was assessed by examining the value of Cronbach's Alpha, composite reliability (CR) and the average variance extracted (AVE). The corresponding construct of Cronbach's Alphas were all higher than 0.80 thresholds. Both CR and AVE achieved a satisfactory level.

Table 5-1 presents the outcomes of reliability. Convergent Reliability was used, for it is a measurable factor forming one of a set that categorizes a system or sets of its operation which is often used in sociology, psychology, and other behavioral sciences. CR is tested using the three criteria of all factors such as CR, AVE, and the item loading on all corresponding components should be big enough.

© 2021 Global Journals

Table 1: Factor Analysis, Composite Reliability, Average Variance Extracted, and Correlation

	MEAN	ST.DEV	CR	AVE	Bi	PE	FC	SAT	PV	SQ
Bi	4.4335	1.00138	0.797	0.568	**0.754**					
PE	4.3639	1.22556	0.933	0.776	0.202	**0.881**				
FC	4.6276	1.25293	0.886	0.722	0.483	0.338	**0.850**			
SAT	4.4614	1.20519	0.825	0.611	0.425	0.486	0.483	**0.782**		
PV	4.6969	1.29101	0.784	0.554	0.379	0.283	0.514	0.489	**0.744**	
SQ	4.2687	1.45745	0.795	0.565	0.403	0.483	0.456	0.459	0.546	**0.751**

Both tables 5-1 and 5-2 indicate the outcomes of convergent validity whereas based on the overall model the relationship of PE between SAT is statistically significant (β=0.235, t= 4.493, P<00.1); the relationship between FC and SAT is statistically significant (β= 0.258, t= 5.058, P<00.1); the relationship between PE and PV is statistically insignificant (β= -0.041, t= -.032, P=0.527); the relationship between FC and PV is statistically significant (β= .361, t= 5.627, P<00.1); the relationship between SQ and SAT is statistically significant (β= .225, t= 2.844, P<00.4); the relationship between PE and PV is statistically significant (β= .589, t= 5.565, P<00.1); the relationship between SAT and Bi is statistically significant (β= .407, t= 4.884, P<00.1); the relationship between PV and Bi is statistically significant (β= .257, t= 3.976, P<00.1).

Table 2: Results of the Key Model

Hypotheses	Path	Path Coefficient	Conclusion
H1a	PE to SAT	(β= 0.235, t= 4.493, P<00.1)	Supported
H1b	PE to PV	(β= -0.041, t= -.032, P=0.52)	Not supported
H2a	SQ to SAT	(β= .225, t= 2.844, P<00.4)	Supported
H2b	SQ to PV	(β= .589, t= 5.565, P<00.1)	Supported
H3a	FC to SAT	(β= 0.258, t= 5.058, P<00.1)	Supported
H3b	FC to PV	(β= .361, t= 5.27, P<00.1)	Supported
H4	SAT to Bi	(β= .407, t= 4.884, P<00.1)	Supported
H5	PV to Bi	(β= .257, t= 3.976, P<00.1)	Supported

All hypotheses in the current investigation at least at the 0.5 significance level except for H1b which is unsupported. The structural model demonstrates the insignificant impact of perceived enjoyment on satisfaction. The rest of the hypotheses are supported where H1a demonstrates a strong impact of perceived enjoyment on satisfaction (β=0.235, t= 4.493, P<00.1), h2a demonstrates a strong impact of service quality on satisfaction (β=.225, t=2.844, P<00.4), h2b demonstrates a strong impact of service quality on satisfaction (β=.589, t=5.565, P<00.1), h3a demonstrates a strong impact of facilitating condition on satisfaction (β=0.258, t=5.058, P<00.1), h3b demonstrates a strong impact of facilitating condition on perceived value (β=.361, t=5.27, P<00.1), h4 demonstrates a strong impact of satisfaction on behavioral intention (β=.407, t=4.884, P<00.1), h5 demonstrates a strong impact of perceived value on behavioral intention (β=.257, t=3.976, P<001) as regards LMS adoption.

© 2021 Global Journals

d) Structural Model

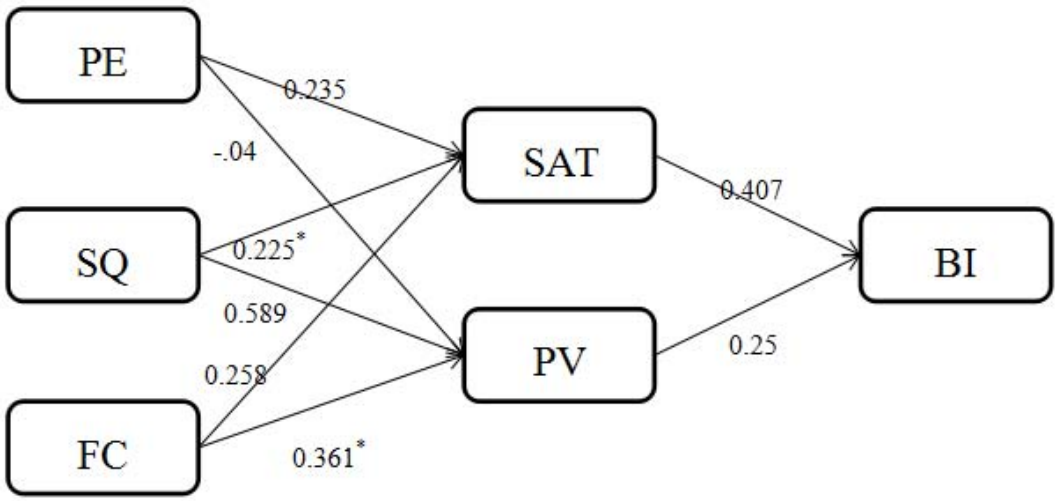

Figure 2: Structural Equation Modeling with Moderation Results

The study came up with conclusive summary about the proposed hypotheses that H1a, H2a, H2b, H3a, and H4 are all supported except for H1b. The researcher therefore concludes that PE is insignificant towards Perceived Value (PV). Although it is an important component, but it is insufficient to define its effect and impact on Perceived Value (PV). All tests were done at the 0.01 significance level. PE has a low correlation to SAT which can be partly attributed to student's perceptions of LMS, and will invariably fluctuate as they use it extensively. However, what is worthy to note is that PE has a negative correlation with PV, meaning that they are mutually exclusive of each other. Even if there is high PV, it does not equate to high PE. The results state that SQ has a low correlation to SAT but a high correlation to PV. This can be explained by students preconceived notions towards LMS adoption. Student service quality can be heightened and exaggerated through grassroots campaigning and word-of-mouth advertising. However, the reality of the matter depends on after use and actual service quality rendered. This is subjective and has too much variance, which explains the low correlation between SQ and SAT. FC puts simply as external conditions (i.e. infrastructure, qualified personnel, ICT facilities, related equipment, and qualified technical support) has a positive relationship with SAT and PV. FC goes hand-in-hand with SAT and PV, although PV slightly edges out SAT. In the end from the model, the researcher ascertain that SAT has a bigger impact (0.407) on Behavioral Intent than Perceived Value (0.250). SAT is most optimally mediated by FC, SQ, and PE. PV is based upon student confidence in LMS, and therefore innately has many problems due to high levels of variance and instability. In conclusion, SAT has the edge over PV in influencing Bi. This can be accounted for due to students trying the platform, investing time in to using LMS and giving school valuable feedback on what they thought was good and what they thought was bad. PV of LMS is excellent but has an innate drawback in that it is subjective and not able to be accurately qualified due to high variance. SAT on the other hand can be quantified due to its robust flexibility and most importantly due to the fact that it relies not on a student's initial feelings towards the platform, but is based on usage time.

Table 3

Rotated Component Matrix[a]				
	Component			
	QUESTIONS		AVE	CRONBACH APLHA
FC1	I have control over using LMS.	.869	0.722	.885
FC2	I have the resources necessary to use LMS.	.805		
FC3	I have the knowledge necessary to use LMS	.839		
BI1	I intend to continue using LMS in the future.	.851	0.568	.789
BI2	I will always try to LMS in my daily life.	.758		
BI3	I plan to continue to use LMS frequently.	.793		

© 2021 Global Journals

PE1	I enjoyed LMS very much.	.897	0.776	.932
PE2	This activity (LMS) is fun to do.	.861		
PE3	This activity (LMS) used to hold my attention.	.866		
PE4	I would describe (LMS experience) as very interesting activity.	.883		
SQ1	The likely quality of this site is extremely high.	.825	0.565	.794
SQ2	This site appears to be of very poor quality.	.768		
SQ3	This site must be of very good quality.	.737		
SAT1	I feel pleased with my overall experience of LMS use.	.812	0.611	.823
SAT2	I feel delighted with my overall LMS experience.	.764		
SAT3	I find LMS useful in my daily life.	.795		
PV1	Using LMS increases my chances of achieving things that are important to me in my academics.	.766	0.554	.778
PV2	Using LMS helps me to accomplish things more quickly in my academics.	.826		
PV3	Using LMS platform increases my productivity.	.729		
Extraction Method: Principal Component Analysis. *Rotation Method: Varimax with Kaiser Normalization.*				

a. Rotation converged in 6 iterations.

Exploratory factor analysis is performed using SPSS to evaluate and assess the values of factor loadings higher than 0.5. The outcomes of exploratory factor analysis present that indices are according to benchmark values which validate the proposed model; the values are between 0.729 and 0.897 . The outcomes do not report the issue of cross-loadings, excepts six items. These components are removed from the construct. Confirmatory Factor Analysis (CFA) is used for measuring the model that consists of validity and reliability test. The first item is done through factor analysis. All factors are tested to be higher than 0.7 that are acceptable to run SEM technique. Secondly, the major component analysis is used in order to analyze all the components. In the reliability test, Cronbach's Alpha value is determined and found to be higher than .7.

IV. Conclusion

This part mainly deliberates the primary study as to what factors mainly influence LMS adoption. This provides more details about adoption and other key determinant components that mainly influence adoption of LMS and to offer vivid perception of the whole adoption process by starting from the key determining factors perceived enjoyment (PE), facilitating conditions (FC), service quality (SQ), satisfaction (SAT), and perceived value(PV) that dominate student's motive towards LMS adoption. Among three key determining variables, PE, FC, and SQ by which SQ possesses the most influence which contributes directly to student's perception of using the platform. However, based on the overall findings PE has an insignificant impact on PV. It means that whatever is felt and received, the better the appraisal will be for the students. The findings show that the better SQ the better the level of value received is. It is vital to enhance and enrich SQ to keep on maintaining its long lasting effect on student's motive to use LMS. Therefore, exploring the factors under SQ should be improved for there has a fundamental influence and impact on PV. Facilitating conditions (FC) are components in classifying student's eagerness and fascination to function a certain task. It is emphasized that skills training, information or materials available, information access and connection, and administrative support are the influencing factors of facilitating conditions. These are labeled and quoted as highly critical that drive students from technology adoption. It is therefore, the absence of accessibility to computers; inadequate technical support extended and online support services provided hinder the acceptability of technology. If these challenges are met, there would be a heavy and strong impact on satisfaction which defines the intention to use. Satisfaction (SAT) is received and felt by the users which determines student's desires, expectations, and needs in line with the adoption whereas the PV is noted as student's overall appraisal of the total worth of the experience taken from student's judgment of what is provided and received. It shows that in case of LMS adoption at the University of Perpetual Help System-Pueblo de Panay Campus, SAT defines Bi whereas PV acts a more significant role which signifies that it has more influence on the intentions to use than what satisfaction does.

References Références Referencias

1. Asiri, M. J., Mahmud, R. B., Abu Bakar, K., & Mohd Ayub, A. F. Bin. (2012). Factors Influencing the Use of Learning Management System in Saudi Arabian Higher Education: A Theoretical Framework. *Higher Education Studies*, *2*(2), 125–137. https://doi.org/10.5539/hes.v2n2p125
2. Asmi, F., Zhou, R., He, T., & Han, F. (2017). Factors Affecting Customer Satisfaction and Intentions to Adopt m-Service in China. *Proceedings - 13th IEEE*

© 2021 Global Journals

International Conference on E-Business Engineering, ICEBE 2016 - Including 12th Workshop on Service-Oriented Applications, Integration and Collaboration, SOAIC 2016. https://doi.org/10.1109/ICEBE.2016.059

3. Bahsh, R. El, & Daoud, M. I. (2016). Evaluating the Use of moodle to achieve effective and interactive learning : a case study at the german jordanian university. *The 2nd International Conference on Open Source Software Computing (OSSCOM 2016).*, 16–20. http://osscom2016.osscom.org/sites/default/files/files/Evaluating the Use of Moodle to Achieve Effective and Interactive Learning.pdf
4. Bombaes, A. (2017). Student's Intentions to Use M-Learning: An Empirical Perspective from the Philippines. *Business and Economic Research*, *8*(1), 68. https://doi.org/10.5296/ber.v8i1.12305
5. Bombaes, A. N., Siyal, S., & Fuasan, J. S. (2019). Measuring the Impact of E-learning Adoption: A Case of University of Perpetual Help System-Pueblo de Panay, Roxas City, Capiz, Philippines. *The International Journal of E-Learning and Educational Technologies in the Digital Media*, *5*(3), 102–109. https://doi.org/10.17781/p002626
6. Costa, C., Alvelos, H., & Teixeira, L. (2012). The Use of Moodle e-learning Platform: A Study in a Portuguese University. *Procedia Technology*, *5*, 334–343. https://doi.org/10.1016/j.protcy.2012.09.037
7. Cronin, J. J., Brady, M. K., & Hult, G. T. M. (2000). Assessing the effects of quality, value, and customer satisfaction on consumer behavioral intentions in service environments. *Journal of Retailing*, *76*(2), 193–218. https://doi.org/10.1016/S0022-4359(00)00028-2
8. Davis, F. D. (1986). A technology acceptance model for empirically testing new end-user information systems: Theory and results. *Management*, *Ph.D.* (April), 291. https://doi.org/oclc/56932490
9. Ghazal, S., Al-Samarraie, H., & Aldowah, H. (2018). "i am Still Learning": Modeling LMS Critical Success Factors for Promoting Students' Experience and Satisfaction in a Blended Learning Environment. *IEEE Access*, *6*, 77179–77201. https://doi.org/10.1109/ACCESS.2018.2879677
10. Goyal, E., & Tambe, S. (2015). Effectiveness of Moodle-Enabled Blended Learning in Private Indian Business School Teaching Niche. *The Online Journal of New Horizons in Education*, *5*(2), 14–22.
11. Haas, B., Hagen, C., Kane, C., Beebe, A., Miller, J., Philip, A., & Sansone, M. (2009). Delivering Technology Innovation : A.T. Kearney's IT Innovation and Effectiveness Study. *A.T. Kearney*.
12. Hussein, Z. (2018). *SUBJECTIVE NORM AND PERCEIVED ENJOYMENT AMONG STUDENTS IN E-LEARNING*. *9*(13), 852–858.
13. Jeng, D. J. F., & Tzeng, G. H. (2012). Social influence on the use of Clinical Decision Support Systems: Revisiting the Unified Theory of Acceptance and Use of Technology by the fuzzy DEMATEL technique. *Computers and Industrial Engineering*, *62*(3), 819–828. https://doi.org/10.1016/j.cie.2011.12.016
14. Oliver, R. L. (1980). A Cognitive Model of the Antecedents and Consequences of Satisfaction Decisions. *Journal of Marketing Research*, *17*(4), 460. https://doi.org/10.2307/3150499
15. Panay, S. De, City, R., & Bombaes, A. N. (2019). *Measuring the Impact of E-learning Adoption: A Case of University of Perpetual Help*. *5*(3), 102–109.
16. Rakic, S., Tasic, N., Marjanovic, U., Softic, S., & Turcin, I. (n.d.). *Student Performance on an E-Learning Platform : Mixed Method Approach Student 1 Student 2 Educational resource 1*. *15*(2), 187–203.
17. Venkatesh, V. (2000). Determinants of Perceived Ease of Use : Integrating Control, Intrinsic Motivation, Acceptance Model. *Information System Research*, *11*(4), 342–365.
18. Venkatesh, V., Thong, J. Y. L., & Xu, X. (2012). Consumer Acceptance and Use of Information Technology: Extending the Unified Theory of Acceptance and Use of Technology. *MIS Quarterly*, *36*(1), 157–178. https://doi.org/10.1111/j.1540-4560.1981.tb02627.x
19. Zanjani, N., Edwards, S. L., Nykvist, S., & Geva, S. (2017). The important elements of LMS design that affect user engagement with e-learning tools within LMSs in the higher education sector. *Australasian Journal of Educational Technology*, *33*(1), 19–31. https://doi.org/10.14742/ajet.2938

© 2021 Global Journals